MEDENUS

Gas Pressure Regulation



# Gas Pressure Regulator RS 250 / RS 251

## Accessories / Options

Operating and Maintenance Instructions

EN

© 11.2023_04

Reprint prohibited!

# Design of the gas pressure regulator RS

## Gas pressure regulator RS250 with integrated SSV indirectly acting

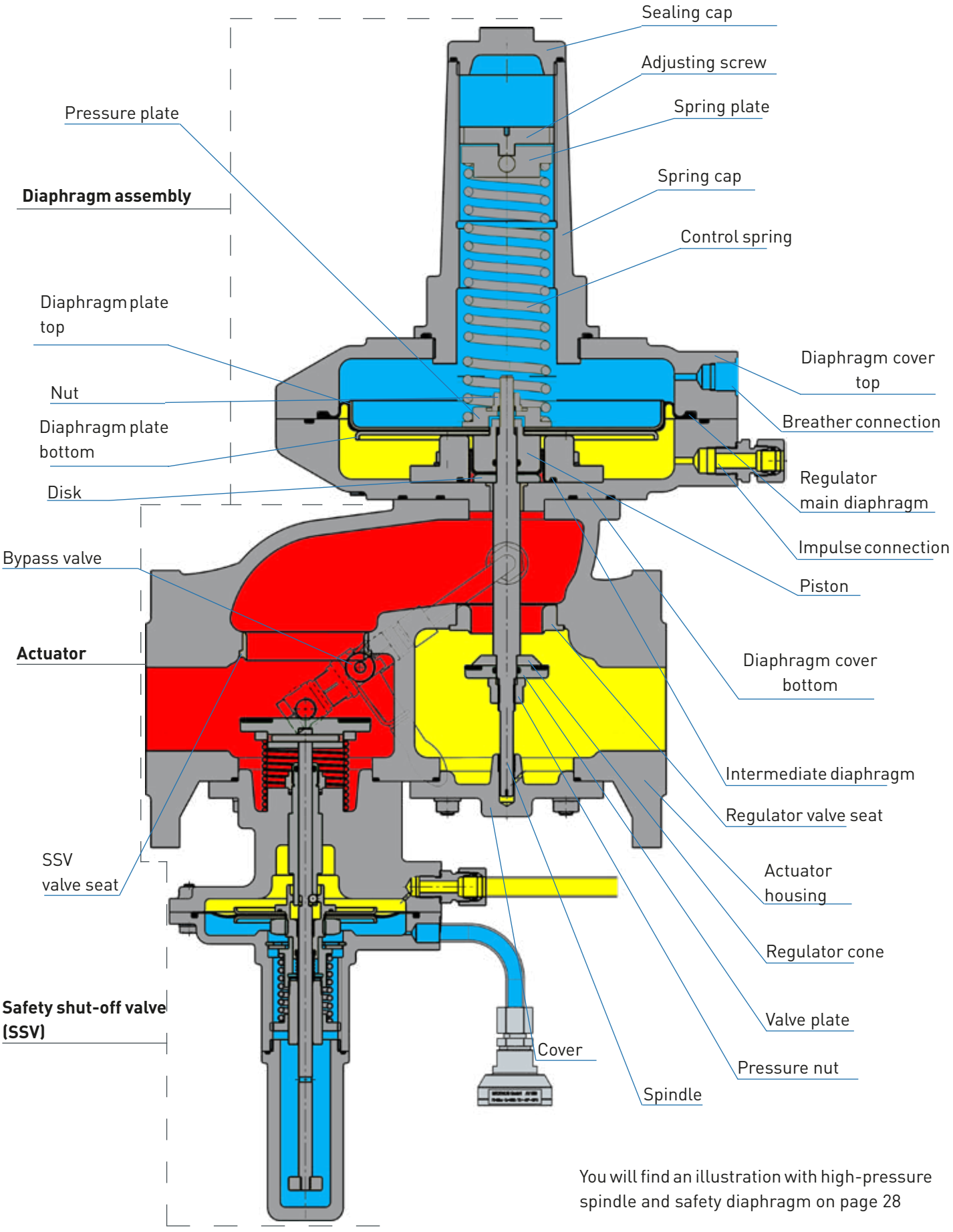


You will find an illustration with high-pressure spindle and safety diaphragm on page 28

## Table of Contents


**1 General Information** **6**
- 1.1 Warranty and Liability 6
- 1.2 Symbols, Notes 7
- 1.3 Terms, Abbreviations 7

**2 Application, Characteristics** **8**
- 2.1 Application 8
- 2.2 Characteristics 8
- 2.3 Types of Models (Options) 8

**3 Avoidance of Foreseeable Misuse** **8**

**4 Safety Instructions** **9**
- 4.1 Hazards of Handling the Device 9
- 4.2 Personnel Requirements 9
- 4.3 Country-Specific Requirements 9
- 4.4 Handover of the Operating and Maintenance Instructions 9
- 4.5 Safety in Operation 10
- 4.6 What to Do in Case of Danger 10

**5 Responsibility of the Operator** **10**

**6 Transport, Storage and Packaging** **11**
- 6.1 Transport 11
- 6.2 Storage 11
- 6.3 Packaging 11

**7 Mounting and Commissioning** **12**
- 7.1 Safety Instructions and Preparation 12
- 7.2 Mounting 12
- 7.3 Leakage Test (Test for External Leakage) 14
- 7.4 Initial Commissioning / Recommissioning 15
- 7.5 Diaphragm Assembly Setpoint Spring Table 17
- 7.6 SSV Setpoint Spring Table - Control Device 19
- 7.7 Decommissioning 21

**8 Maintenance** **21**
- 8.1 Maintenance Plan 21
- 8.2 Maintenance Procedure 22
- 8.3 Table of Screw Tightening Torques $M_A$ * 23
- 8.4 Lubricants Table 23
- 8.5 Screw Retention 23

**9 Troubleshooting** **24**
- 9.1 Gas Pressure Regulator 24
- 9.2 Safety Shut-Off Valve 25

**10 Replacement and Disposal** **26**

**11 Spare Parts** **27**
- 11.1 Spare Parts Drawing RS 250 / RS 251 DN 25 - DN200 27
- 11.2 Optional Spare Parts Drawing 28
- 11.3 Parts for Maintenance Work 29
- Main diaphragm and O-ring 29
- Intermediate diaphragm 29
- Valve plate 29
- Valve Plate SSV / Diaphragm SSV 30
- O-Ring and Sealing Ring Sets 30
- Safety diaphragm 31

**Notes** **32**

**12 Accessories / Options** **33**
12.1 Noise Reduction 33
12.2 High-Pressure Spindle 35
12.3 AV 530 breather valve 36
12.4 RSD3 Restrictor Valve 37
12.5. Signal Transmitter / Reedcontact 38
12.6 Baffle Plate / Restrictor Plate 41
12.7 SSV manual and remote release 43
12.8. SM Safety Diaphragm 45

**13 Tools** **46**
13.1 Brace and bit with 4-jaw chuck 46
13.2 SSV Tightening Tool 46

# 1 General Information

The personnel entrusted with installation, operation or maintenance of the gas pressure regulator must have completely read and understood beforehand the following documents:

- **Gas Pressure Regulator RS 250 / RS 251 Product Information**
  The product information contains technical data, dimensions and a description of the design and the mode of operation.

- **Gas Pressure Regulator RS 250 / RS 251 Operating and Maintenance Instructions**
  This document allows safe and efficient handling of the device and contains information on assembly, commissioning, maintenance, troubleshooting, and repair according to regulations.
  It is an integral part of the scope of delivery of the device, must be kept in close proximity of the device and must be readily accessible to personnel at any time.
  The basic prerequisite for safe working is compliance with all safety instructions and instructions for action given in this manual. Accordingly, the information and instructions must be observed when working on the device or on the gas line. In addition, the local occupational safety regulations and general safety regulations for the application range of the device shall apply.
  The figures in these instructions are provided for basic understanding and may differ from the actual design.
  The contents of these instructions are protected by copyright. They may be used as part of operating the device. Any other use and/or reproduction is not permitted without prior authorization by MEDENUS Gas-Druckregeltechnik GmbH.

## 1.1 Warranty and Liability

Claims under warranty or liability for personal injury and material damage are generally void **if** one or several of the following **conditions are not observed**:

- Work on the device during the warranty period may only be performed in consultation with the manufacturer
- Designated use of the device in accordance with the established conditions of use
- Proper installation, commissioning, operation and maintenance of the device
- Operation of the device with properly installed and functioning safety devices only
- Operating and maintenance instructions of the device or of the system
- Compliance with the maintenance instructions
- Properly performed repairs
- Supply lines without defects
- The use of original MEDENUS© spare parts and lubricants listed in these instructions
- Force majeure

**It is generally prohibited**

- To perform constructive modifications on the device
- To keep using the device despite the detection of a defect


© 11.2023_04

## 1.2 Symbols, Notes

The instructions contain safety instructions marked with symbols to indicate possible consequences in case of non-observance:

This combination of symbol and signal word indicates a potentially hazardous situation which, if not avoided, may result in minor or moderate injury, damage to the device, the breakdown of the system, and material or environmental damage.



**ATTENTION**

This combination of symbol and signal word indicates an imminent hazardous situation which, if not avoided, will result in death or serious injury.



**DANGER**

This signal word highlights useful tips, recommendations, and information for efficient and trouble-free operation.

**Note**

## 1.3 Terms, Abbreviations

Terms and abbreviations are explained below:

| | |
|---|---|
| ATC | Acceptance test certificate |
| DN | Nominal width |
| GPR | Gas pressure regulator |
| HDS | High-pressure spindle |
| $M_A$ | Screw tightening torque |
| MOP | Maximum operating pressure in a system |
| $p_d$ | Outlet pressure |
| $p_{ds}$ | Setpoint of the outlet pressure |
| SSV | Safety shut-off valve |
| SRV | Safety relief valve |



© 11.2023_04

# 2 Application, Characteristics

## 2.1 Application

Gas pressure regulator (GDR), direct-acting (operating without auxiliary power), for systems acc. to DVGW work sheets G 491 (A) and G 600 (A) (TRGI)
Particularly suitable for dynamic regulation sections (e.g. gas fireplaces, natural gas supply systems, burner circuits, gas motor operation)
Can be used as an equipment component on gas consumption facilities as defined in Regulation (EU) 2016/426.
Can be used for the gases defined in DVGW work sheet G 260 / G 262 and neutral non-aggressive gases. (other gases on request)

## 2.2 Characteristics

- Integral pressure-tight model (IS)
- Gas pressure regulator with integrated SSV
- Easy maintenance through replaceable SSV functional units (modular design)
- SSV functional class, optionally A or B
- Open-air model

## 2.3 Types of Models (Options)

- Oxygen model
- Without SSV
- noise reduction
- SSV manual release
- SSV electromagnetic remote release when power is applied or in case of power failure
- electric position indicator SSV "Closed" via inductive proximity initiator or via Reed contact
- AV 530 breather valve (SSV diaphragm rupture protection)
- throttle valve (RSD3) for impulse line of the regulator
- Coating with epoxy resin in RAL colours

# 3 Avoidance of Foreseeable Misuse

- The regulators must not be used to control liquids.
- The regulators must not be used in temperature ranges below -20 °C or above 60 °C.
- The regulators must not be used for pressure ranges higher than the pressure "PS" indicated on the nameplate.

- The regulators may only be used for the gases specified under item 2.1 Application in these operating instructions.

  Other gases, such as oxygen or hydrogen, must be explicitly stated on the nameplate.
  Please consult the manufacturer before use.
- The regulators must not be used in high-temperature areas (HTB) without an upstream HTB fuse.


© 11.2023_04

# 4 Safety Instructions

National accident prevention regulations and the system operator's safety regulations are not superseded by these operating and maintenance instructions and must be taken into consideration with priority (in Germany, see, among others, DVGW work sheets G 600, G 459/II, G 491 and G 495).

When performing work on the device, the current general and specific safety regulations must be observed.
The application limits of the device with respect to the medium, operating pressure and operating temperature can be found on the nameplate affixed to the device or on the acceptance test certificate.
Using the device under different operating conditions must be agreed upon in consultation with
MEDENUS Gas-Druckregeltechnik GmbH.

The mechanical components of the device do not have any potential ignition sources of their own nor any hot surfaces and are thus not covered by the scope of ATEX 2014/34/EU. The electronic accessories used comply with the ATEX requirements.

## 4.1 Hazards of Handling the Device

MEDENUS© devices conform with current standards and directives, the recognized technical rules
and the recognized safety rules.

However, improper use can result in hazards to the user or to third parties. This can also result in damage to the device or to the system.

This is why the device may only be used:

- in accordance with its designated use
- in perfect condition
- while observing the notes given in these operating and maintenance instructions, and inspection and maintenance regulations, which apply to the functioning and safety of the overall system.

Malfunctions or faults must be eliminated immediately.

## 4.2 Personnel Requirements

The device may only be mounted by qualified personnel.
Only authorized personnel with the required qualification is allowed to perform settings or repairs on the device.

## 4.3 Country-Specific Requirements

The rules and regulations applicable at the place of use with respect to

- gas lines, installation of the gas system,
- gas supply,
- work on the gas system,
- accident prevention

must beobserved and complied with.

## 4.4 Handover of the Operating and Maintenance Instructions

The supplier of the system shall hand over these operating and maintenance instructions to the operator of the system no later than during commissioning and training
of the operating personnel with the reminder to carefully store these instructions.


© 11.2023_04

### 4.5 Safety in Operation

The device may only be used when all protective devices on the device or in the system are fully functional.
The device must be inspected by a representative of the manufacturer or by a qualified person for externally visible damage and for proper functioning at least once a year.
A more frequent inspection may become necessary, depending on the system conditions.

### 4.6 What to Do in Case of Danger

Information on what is to be done in case of danger and in case of accidents can be found in the respective operator's or specialist companies' work instructions.

## 5 Responsibility of the Operator

**Operator**

An operator is a person who operates the device himself/herself for commercial or economic purposes or leaves it to a third party for use/application and is legally responsible for the safety of the user, the personnel or third parties during operation.

**Operator duties**

The device is used in the commercial sector. The operator of the device is therefore subject to the legal obligations for occupational safety. In addition to the safety instructions contained in these instructions, the established maintenance intervals must be observed, taking into account the respective national standard (alarm and hazard prevention plan).

In particular, the following applies:

- The operator is obliged to perform work on MEDENUS© devices during the warranty period only after consultation with the manufacturer. Otherwise the claims under warranty will become void.
- The operator must obtain information on the current occupational safety regulations and determine additional hazards resulting from the special work conditions at the place of use of the device in a risk assessment. The operator must implement the results in the form of operating instructions for the device.
- During the entire time of use of the device, the operator must check whether the operating instructions issued by him/her conform to the current state of the regulations and, if necessary, adapt them.
- The operator must clearly regulate and define the responsibilities for installation, operation, troubleshooting, maintenance and cleaning.
- The operator must ensure that all persons handling the device have read and understood these instructions. In addition, the operator must train the personnel at regular intervals and inform them about the hazards.
- The operator must make available to the personnel the required protective equipment and oblige them to wear the required protective equipment.
- Moreover, the operator is responsible for the device always being in technically perfect condition.

Therefore, the following applies:

- The operator must make sure that the maintenance intervals described in these instructions are observed.
- The operator must have all safety devices checked regularly for functionality and completeness.


© 11.2023_04

# 6 Transport, Storage and Packaging

## 6.1 Transport

**Note**

The device is delivered with flange protection caps. They must be removed prior to installation.
Make sure that the device is transported horizontally using suitable lifting gear. The device must be handled carefully and secured against impacts and knocks.
In case of transport damage, we will require the following information from the nameplate affixed to the device:

- Device type
- Device model
- Year of construction/fabrication number

## 6.2 Storage

**Equipment and spare parts must be stored under the following conditions:**

- Do not store outdoors.
- Store in a dry and dust-free location.
- Store on a flat surface.
- Do not expose to aggressive media.
- Do not expose to ozone or ionizing radiation.
- Do not store adjacent to direct heat sources.
- Avoid mechanical vibrations.
- Storage temperature: 0 to 25 °C.
- Relative air humidity: < 55 %.

**Spare parts:**

- Components susceptible to corrosion must be provided with a suitable preservative.
- Do not store O-rings and seals for more than 5 years even if stored properly.
- Spare parts must be stored in their original packaging until use.

**Storage period for devices:**

- Storage of the device for up to one year:
  Store the gas pressure regulator in its original packaging and original condition at the time of supply. All protective caps of the device must remain mounted.
- Storage of the device for more than 1 year (e.g. as a spare device):
  Store the device in its original packaging and its original condition as delivered and check it for damage once a year. Check the housing surface for dirt, damage and corrosion. If necessary, clean all external parts. After 5 years, all O-rings and seals must be replaced.

## 6.3 Packaging

- The individual packaged items have been packaged in view of the transport conditions to be expected.
- The symbols on the packaging must be observed during transport and storage.
- Only environmentally friendly materials have been used for packaging.
- The packaging is designed for protecting the individual components from transport damage, corrosion and other damage until mounting. This is why the packaging must not be destroyed and only removed just prior to mounting.


© 11.2023_04

# 7 Mounting and Commissioning

## 7.1 Safety Instructions and Preparation

Prior to starting work on pressurized components:

**DANGER**



- Close all connections to the gas line.
- Depressurize all pressurized components. Also discharge residual energies.
- Defective components charged with pressure in operation must be replaced immediately by an appropriate expert.

Prior to starting work, ensure sufficient clearance for mounting.
Before installing the device, check whether the performance data (nameplate) and the scope of delivery coincide with the order or the system data, i.e., make sure that the provided devices are suitable for their intended purpose. In particular, the inlet pressure of the system must be lower than the maximum allowable pressure of the device.

**Note**

Direct contact of gas valves and fittings, i.e., the control system, with hardening masonry, concrete walls or floors is not permitted. Provide suitable supports, working materials and protective equipment. The minimum distances to the masonry etc. must be carried out in acc. with DVGW worksheet G491 / G600.
Take into account the minimum clearances for maintenance as stated in the product information.
Before installing the device in the pipeline, check whether a shut-off device that interrupts the gas flow supply to the device has been mounted upstream and downstream of the device to be installed.

**Note**

**DANGER**



Prior to commissioning, make sure that all installation work has been carried out and completed in accordance with the data and information given in these instructions and that no unauthorized persons stay in the danger zone.

Important information:
If a safety relief valve SL10 is used, the switching point of the SRV must be approx. 20% below the

**Note**

## 7.2 Mounting

- Remove the packaging, flange protection caps and shipping braces.
- Check the device for wear and damage.

**Note**

- Make sure that the device is installed free of stress (see DVGW info gas no. 19).
  Make sure to observe the direction of flow i.e., the arrow on the housing must point in the direction of flow.

**Note**

**Note**

- All breather lines (items 7.04 / 7.07) must be vented to the outside atmosphere.

### Tightening torques $M_A$*)

| Gas pressure regulators | | Flange tightening torques | |
|---|---|---|---|
| Screw size | Screw tightening torque $M_A$ | Screw size | Screw tightening torque $M_A$ |
| M6 | 8 Nm | M12 | 60 Nm |
| M8 | 18 Nm | M16 | 120 Nm |
| M10 | 36 Nm | M20 | 190 Nm |
| M12 | 62 Nm | | |

*) For the assembly of the flange connections, the maximum torques specified by the flange and gasket manufacturers must be observed. The values given here are maximum values in relation to the fitting.


© 11.2023_04

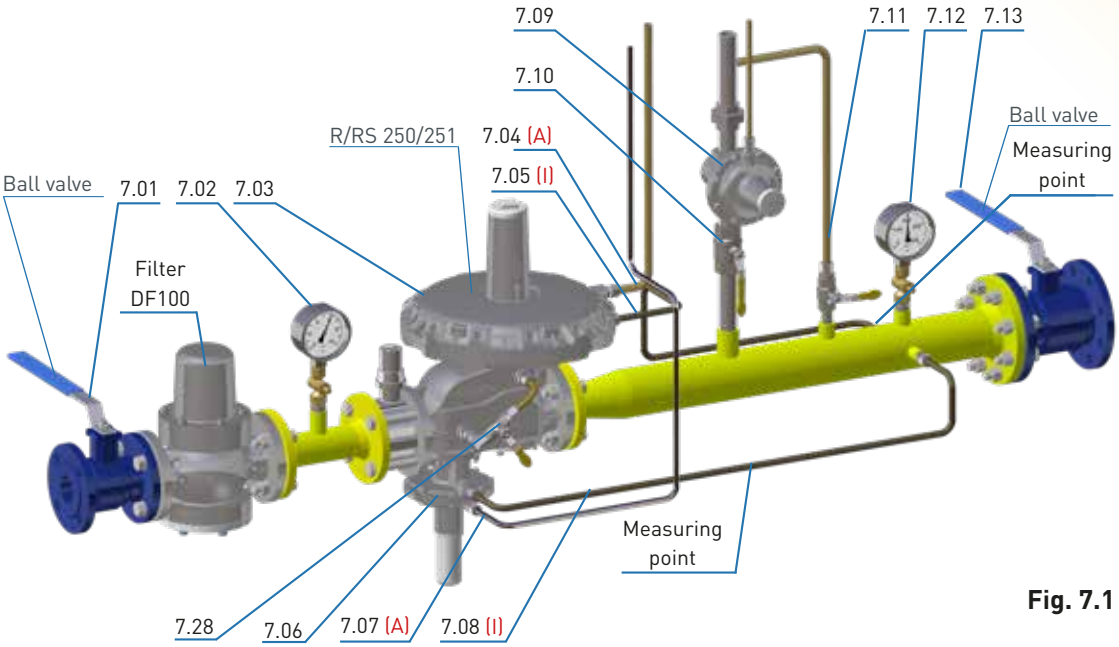


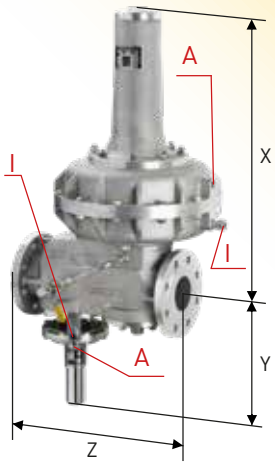


**Fig. 7.1**

- Breather lines (items 7.04 / 7.07) may not be required if breather valves or safety diaphragms are being used.
- The measuring lines (items 7.05 / 7.08) must be connected in a pipeline section with a steady flow. There must be no installations that cause flow interference such as shutters, expansions, manifolds, junctions, isolation valves etc. directly upstream and downstream of the measurement point.
- The maximum flow rate at the measuring point must not exceed 25 m/s, depending on the system conditions.
- The maximum flow rate at the measuring point must not exceed 25 m/s, depending on the system conditions.
- In certain system circuits, such as gas control systems for gas motors and in gas burners, higher flow rates than 25 m/s are also possible. Please contact us.
- The measuring line must be connected to the pipeline or to the measuring point separately, laterally or at the top for each device (1 gas pressure regulator (item 7.03); 1 integrated SSV (item 7.06)).
- The SSV measuring line (item 7.08) must always be connected upstream of the first shut-off valve (item 7.13) on the outlet side in such a way that it cannot be shut off.
- The SSV (item 7.06) can be rotated to any position.

## Connection

| Nennweite / nominal size | | Abmessung / dimension (mm) | | | Anschluss Regler / connection Regulator | | Anschluss Regler Öffnungsdurchmesser / connection Regulator opening diameter (mm) | | | | | | | Anschluss SAV / connection SSV | | Anschluss SAV Öffnungs-durchmesser / connection SSV opening diameter (mm) | |
|---|---|---|---|---|---|---|---|---|---|---|---|---|---|---|---|---|---|
| | | | | | | | Impulsleitung / impulse line (I) Atmungsleitung / breathing line (A) | | | | | | | | | | |
| | | | | | | | Diaphragm cover Ø | | | | | | | | | | |
| | DN | X | Y | Z | Impuls-leitung / impulse line (I) | Atmungs-leitung / breathing line (A) | 160 | 205 | 275 | 330 | 385 | 390 | 485 | Impuls-leitung / impulse line (I) | Atmungs-leitung / breathing line (A) | Impuls-leitung / impulse line (I) | Atmungs-leitung / breathing line (A) |
| RS250 | 25 | 328 | 269 | 230 | RP 3/8" | RP 3/8" | 3 | | 4 | | 6 | | 8 | RP 1/4" | RP 1/4" | 2 | 3 |
| | 50 | 348 | 282 | 230 | | | | | | | | | | RP 1/4" | RP 1/4" | 2 | 3 |
| | 80 | 406 | 305 | 310 | | | | | | | | | | RP 1/4" | RP 1/4" | 2 | 3 |
| | 100 | 421 | 315 | 350 | | | | | | | | | | RP 1/4" | RP 1/4" | 2 | 3 |
| | 150 | 716 | 386 | 480 | | | | | | | | | | RP 3/8" | RP 3/8" | 4 | 2 |
| | 200 | 784.5 | 400 | 600 | | | | | | | | | | RP 3/8" | RP 3/8" | 4 | 2 |
| RS251 | 50 | 406 | 305 | 310 | | | | | | | | | | RP 1/4" | RP 1/4" | 2 | 3 |
| | 80 | 644 | 311 | 410 | | | | | | | | | | RP 1/4" | RP 1/4" | 2 | 3 |
| | 100 | 716 | 386 | 480 | | | | | | | | | | RP 3/8" | RP 3/8" | 4 | 2 |



© 11.2023_04

## 7.3 Leakage Test (Test for External Leakage)

The devices are subjected to a strength and leakage test ex works at MEDENUS Gas-Druckregeltechnik GmbH.

The leakage test in the fully assembled system must be performed prior to commissioning and following maintenance work.
For the external leakage test in the fully assembled system, the following applies:

**For Germany:**
According to DVGW work sheet G 491, the fully assembled system must be subjected to a leakage test with air or an inert gas at the installation site, using 1.1 times the maximum operating pressure of the system (MOP).
An exception is the room between the actuator and the first shut-off valve on the outlet side. This room must be checked using the test pressure corresponding to the maximum permissible pressure in the system in case of a malfunction (1.1 $MOP_d$). In this test, all detachable connections must be checked using a foaming agent.

In direct-acting devices (without power supply), the outlet pressure acting on the actuator (limited by the SSV) should not be more than 0.5 bar above the set setpoint. This should be taken into account when specifying the response pressure of the upstream SSVs.
(Configuration, page 20)

**Note**

**For other countries:**
The relevant national and international standards shall apply.

**Procedure**

- Close the ball valve upstream of the valves and fittings (item 7.01).
- Close the downstream shut-off devices (item 7.13) (ball valve, solenoid or pneumatic valve).
- Depressurize the system (item 7.11).
- If there is a SRV (safety relief valve) in the controlled section and the test pressure is higher than the relief pressure of the SRV (item 7.09), the line upstream of the SRV (item 7.10) must be closed.
- Always increase the test pressure slowly and steadily.

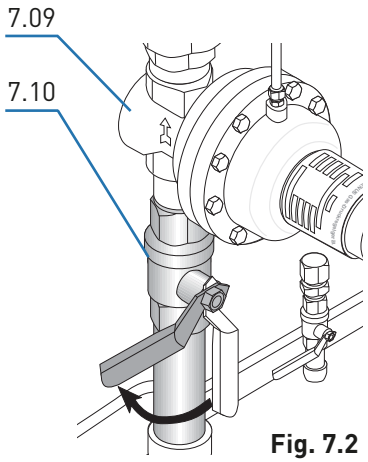

Fig. 7.2

**Note**

**While doing so, you must ensure:**
Pressure in outlet chamber (item 7.12) ≤ pressure in inlet chamber (item 7.02)
Pressure build-up always from the inlet side (inlet chamber)
Pressure reduction always from the outlet side (outlet chamber)

- After leakage test:
  Open the ball valve in the SRV line (item 7.10) again.

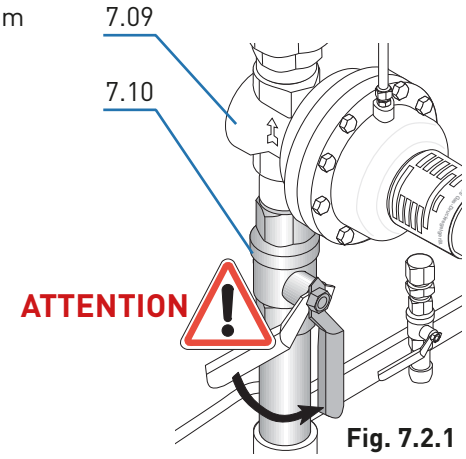

Fig. 7.2.1


© 11.2023_04

## 7.4 Initial Commissioning / Recommissioning

Initial commissioning of the system components shall be carried out by the operator. For commissioning, please refer to the documents listed under item 1 "General Information" and the system operator's work instruction.
The devices delivered by MEDENUS Gas-Druckregeltechnik GmbH are factory-set to the operating data specified by the customer. This data is listed on the Acceptance Test Certificate (ATC)* and the type plate.

**Note** Prior to commissioning of the system, a functional test must be performed on the gas pressure regulator (GPR), if applicable, and the safety shut-off and safety relief valves.

**Procedure (fig. 7.1)**

- Close the ball valve upstream of the valves and fittings (item 7.01).
- Close the downstream shut-off devices (item 7.13) (ball valve, solenoid or pneumatic valve).
- Depressurize the system (item 7.11).
- Close the venting ball valve (item 7.11).
- Slowly open ball valve upstream of the valves and fittings (item 7.01) (pressure increase approx. 0.5 bar/s).

**Note** If the inlet shut-off device is equipped with a bypass, the latter must be slowly opened for pressure compensation as step 1. This is followed by slowly opening the inlet shut-off valve which will close the bypass. The same is true of the outlet shut-off valve.

- Check the inner leakage of the SSV (item 7.06) by reading the pressure gauge installed downstream of the GPR (item 7.12).
- Unscrew the sealing cap (item 7.15) of the safety shut-off valve (SSV).
- Perform pressure compensation via the SSV by pulling at the pull knob (item 7.14) and allow the SSV to engage. On a GPR with bypass ball valve (item 7.28), open the ball valve (item 7.28) while pulling the pull knob (item 7.14) until the SSV engages to perform pressure compensation.
- A closing pressure corresponding to the set value is established on the GPR.
- Testing the response pressure of the SSV by slowly increasing or decreasing the output pressure to response pressure.
- It may be necessary to correct the setpoint values of the response pressures. This is done by turning the SSV setpoint setting screws (items 7.17 / 7.19) to the right (pressure increase) or left (pressure decrease) in order to increase/ decrease the setpoint value.

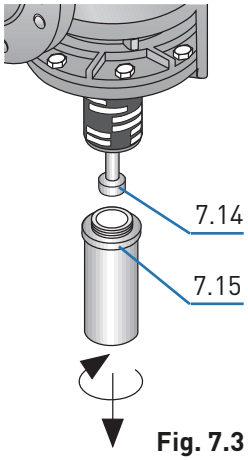

**Fig. 7.3**

**Note** The inner setting screw (item 7.17) sets the underpressure shut-off level (lower trigger level) and the outer setting screw (item 7.19) sets the upper trigger level.

- Perform pressure compensation via the SSV again by pulling the pull knob (item 7.14) and allowing the SSV to engage.

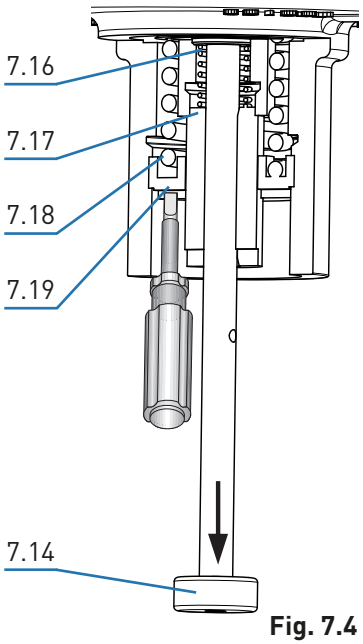

**Fig. 7.4**

*) Acceptance Test Certificate (ATC) available optionally


© 11.2023_04

- For the functional test of the GPR, let gas flow via the discharge line (venting) (item 7.11) to the outside atmosphere and read the set regulating pressure on the outlet pressure gauge (item 7.12).
- It may be necessary to correct the setpoint of the outlet pressure.
  This is done by turning the GPR setpoint setting screw (item 7.22) to the right or left, in order to increase and decrease the setpoint, respectively, after removal of the GPR sealing cap (item 7.21).
- After closing the discharge line (item 7.11), a constant closing pressure within the closing pressure class can be read on the outlet pressure gauge (item 7.12).
- Slowly open the shut-off valve (item 7.13), close the discharge line (item 7.11) and read the set regulating pressure on the outlet pressure gauge (item 7.12).
- It may be necessary to correct the setpoint of the outlet pressure once again.
- Screw on the sealing cap (item 7.15) of the safety shut-off valve (SSV) again.
- Screw on the GPR sealing cap (item 7.21) again.

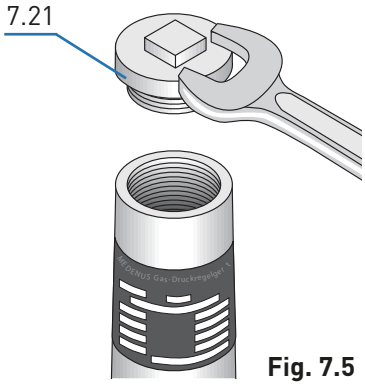

Fig. 7.5

**Changing the control range**

Switching to the control range of a different setpoint spring can be done for the SSV as well as for the GPR while the device is pressurized.

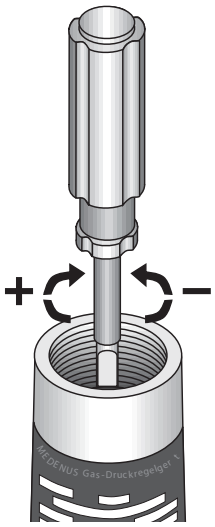

Fig. 7.6

**Gas pressure regulator**

- Take off the sealing cap (item 7.21) and unscrew the setting screw (item 7.22),
- Pull out the spring plate (item 7.24) with ball (item 7.23) and spring (item 7.25) and replace the spring with one that fits.
- Screw in the spring plate (item 7.24), the ball (item 7.23) and the setting screw (item 7.22) again.
- Set the desired setpoint and screw on the sealing cap (item 7.21).

**Safety shut-off valve**

- Remove the sealing cap (item 7.15) and screw off the pull knob (item 7.14) for changing the spring of the underpressure shut-off device (item 7.16).
- Screw off the corresponding setting screw (items 7.17 / 7.19) for the upper or lower trigger level.
- Pull out the spring (item 7.16 / 7.18) and replace it with one that fits.
- Screw in the setting screw (item 7.17 / 7.19) again and fasten the pull knob (item 7.14) on the spindle again.
- Set the desired setpoint and screw on the sealing cap (item 7.15).

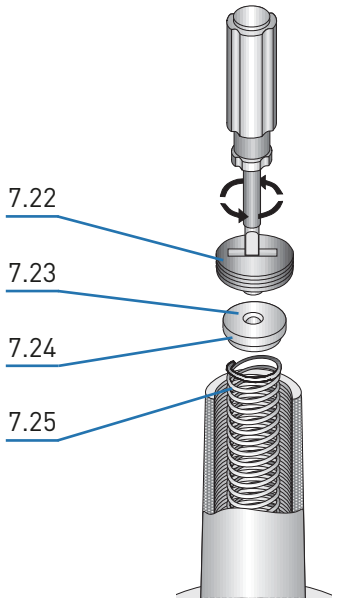

Fig. 7.7

The SSV closes if the overpressure setpoint spring (upper trigger level) is removed from a pressurized system.

**Note**


© 11.2023_04

## 7.5 Diaphragm Assembly Setpoint Spring Table

| Spring data | | Specific command range $W_{ds}$ [mbar] | | | |
|---|---|---|---|---|---|
| Spring no. | Color [RAL] | RE 205 | RE 275 | RE 330 | RE 390 |
| FA 04 | 4002 | - | - | 18 - 22 | - |
| FA 05 | 7037 | - | - | 21 - 29 | - |
| FA 06 | 9005 | - | - | 28 - 39 | 18 - 24 |
| FA 07 | 3020 | - | - | 38 - 54 | 23 - 32 |
| FA 08 | 9010 | - | - | 53 - 77 | 31 - 45 |
| FA 09 | 7016 | 200 - 295 | - | 76 - 111 | 42 - 64 |
| FA 10 | 6010 | 280 - 430 | 130 - 225 | 110 - 166 | 59 - 94 |
| FA 11 | 2002 | 419 - 653 | 208 - 339 | 165 - 250 | 88 - 142 |
| FA 12* | 7035 | 595 - 935 | 293 - 450 | 239 - 361 | 124 - 203 |
| FA 13* | 5010 | 819 - 1408 | 436 - 726 | 360 - 544 | 185 - 305 |
| FA 14* | 1028 | 1245 - 1976 | 607 - 1017 | 506 - 765 | 258 - 428 |
| FA 15* | 6018 | 1212 - 2553 | 699 - 1100 | 535 - 800 | 297 - 450 |
| FA 16* | 3020 | 1330 - 3000 | - | - | - |

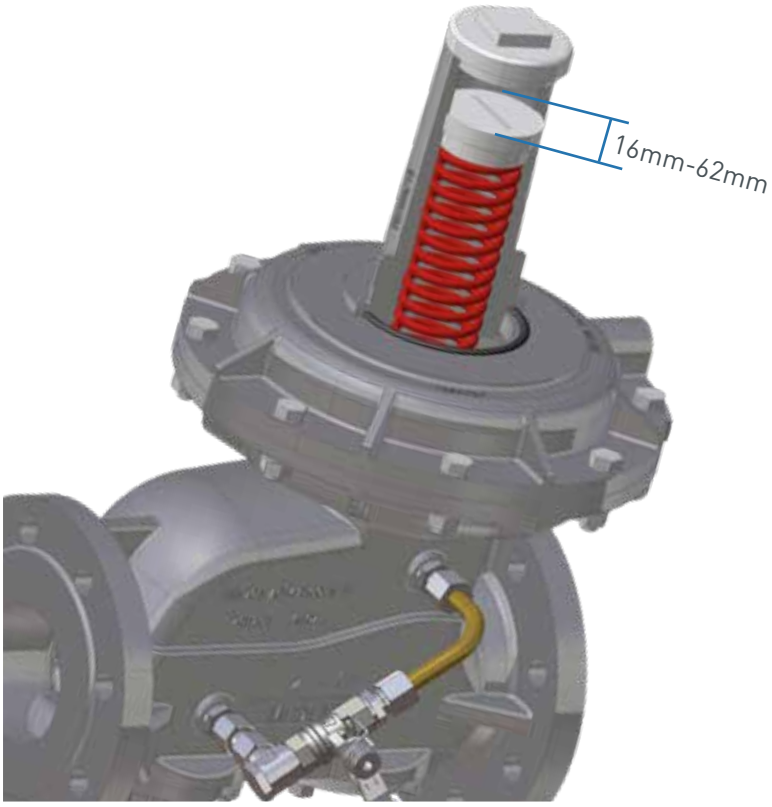


FA spring series for RS250 DN 025 - DN 100 and RS251 DN 050

shown RS250 DN 080 with FA11

*) with high-pressure screw spindle (HDS shown in chapter 12.2



© 11.2023_04

| Spring data | | Specific command range $W_{ds}$ [mbar] | | |
|---|---|---|---|---|
| Spring no. | Color [RAL] | RE 275-2 | RE 385 | RE 485 |
| FB 701 | 6018 | - | - | 18 - 22 |
| FB 702 | 9006 | - | - | 21 - 25 |
| FB 703 | 5015 | - | - | 24 - 31 |
| FB 704 | 4002 | - | - | 28 - 36 |
| FB 705 | 7037 | - | - | 33 - 44 |
| FB 706 | 9005 | - | - | 41 - 56 |
| FB 707 | 3020 | - | - | 51 - 71 |
| FB 708 | 9010 | - | 150 - 167 | 65 - 94 |
| FB 709 | 7016 | 350 - 450 | 165 - 215 | 82 - 118 |
| FB 710 | 6010 | 397 - 596 | 212 - 285 | 105 - 155 |
| FB 711 | 2002 | 542 - 814 | 280 - 390 | 140 - 209 |
| FB 712 | 7035 | 742 - 1078 | 385 - 520 | 188 - 275 |
| FB 713* | 5010 | 977 - 1442 | 515 - 671 | 246 - 369 |
| FB 714* | 1028 | 1245 - 1878 | 661 - 850 | 311 - 450 |
| FB 715* | 6018 | 1547 - 2469 | - | - |
| FB 716* | 3020 | 2136 - 3000 | - | - |

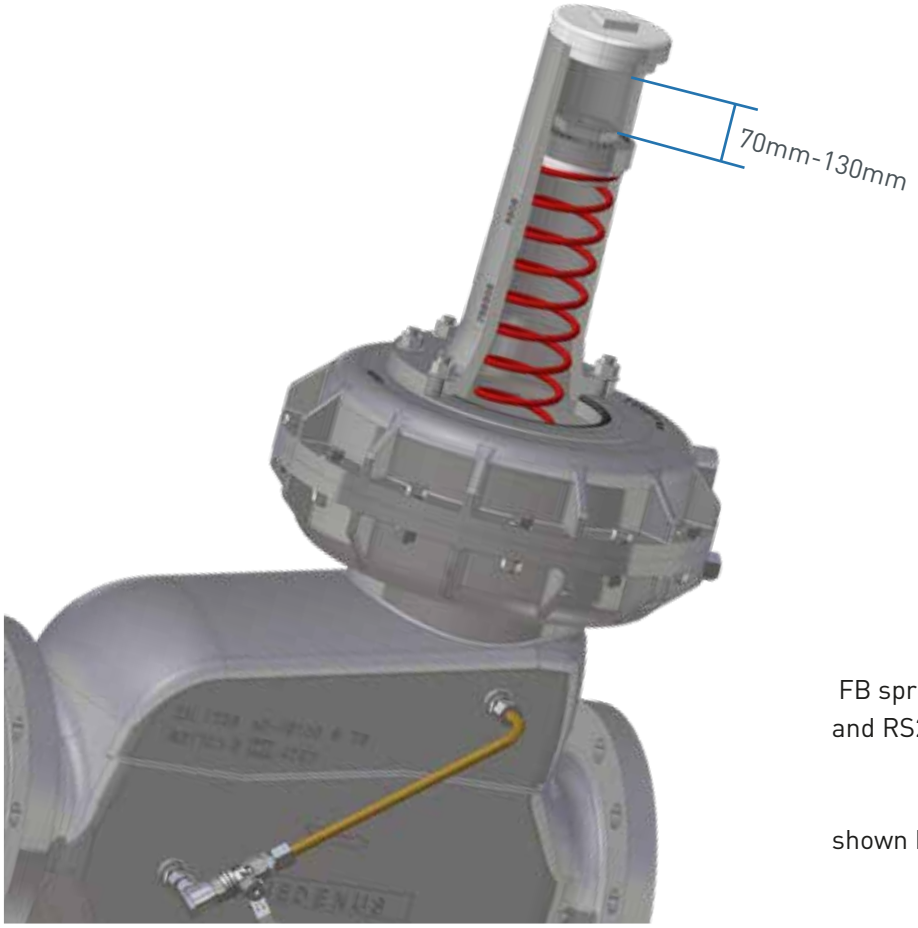


FB spring series for RS250 DN 150 - DN 200 and RS251 DN 080 - DN 100

shown RS250 DN 200 with FB707



© 11.2023_04

## 7.6 SSV Setpoint Spring Table - Control Device

| | | RS 250: DN 25 - 100 / RS 251: DN 50 - 80 | | | | | | | |
|---|---|---|---|---|---|---|---|---|---|
| | | small ball lock | | | | | | | |
| | | ND | | | | MD | | | |
| | | to $W_{ds\,o}$ 200mbar | | | | to $W_{ds\,o}$ 300mbar | | | |
| Spring data | | Lower response pressure | | Upper response pressure | | Lower response pressure | | Upper response pressure | |
| Feder Nr. | Farbe [RAL] | $W_{ds\,u}$ [mbar] | $\Delta p_{wu}$ [mbar] | $W_{ds\,o}$ [mbar] | $\Delta p_{wo}$ ** [mbar] | $W_{ds\,u}$ [mbar] | $\Delta p_{wu}$ [mbar] | $W_{ds\,o}$ [mbar] | $\Delta p_{wo}$ ** [mbar] |
| FE 900 | 1028 | 1 - 3 | 15 | | | 1 - 8 | 20 | | |
| FE 901 VA | 2002 | 4 - 6 | 15 | | | 6 - 17 | 20 | | |
| FE 902 VA | 6010 | 5 - 15 | 15 | | | 12 - 24* | 20 | | |
| FE 903 | 5015 | 10 - 17 | 15 | | | 22 - 40 | 20 | | |
| FE 904 VA | 9005 | 12 - 19 | 15 | | | 30 - 50 | 20 | | |
| FE 905 VA | 9010 | 20 - 25 | 15 | | | 45 - 70 | 20 | | |
| FE 906 | 4002 | | | | | 65 - 100 | 20 | | |
| FD 910 | 1028 | | | 8 - 17 | 15 | | | 20 - 40 | 20 |
| FD 911 | 2002 | | | 20 - 30 | 15 | | | 35 - 70 | 20 |
| FD 912 | 6010 | | | 30 - 55 | 15 | | | 65 - 110 | 20 |
| FD 913 | 5015 | | | 44 - 74 | 15 | | | 100 - 160 | 20 |
| FD 914 | 9005 | | | 63 - 110 | 15 | | | 150 - 235 | 20 |
| FD 915 | 9010 | | | 99 - 178 | 15 | | | 225 - 300 | 20 |
| FD 916 | 3020 | | | 157 - 200 | 15 | | | | |
| FD 917 | 5010 | | | | | | | | |
| FD 918 | 9006 | | | | | | | | |
| FD 919 | 4002 | | | | | | | | |

| | | RS 250: DN 25 - 100 / RS 251: DN 50 - 80 | | | | | | | |
|---|---|---|---|---|---|---|---|---|---|
| | | small ball lock | | | | | | | |
| | | MD-R | | | | HD | | | |
| | | to $W_{ds\,o}$ 3500mbar | | | | to $W_{ds\,o}$ 8000mbar | | | |
| Spring data | | Lower response pressure | | Upper response pressure | | Lower response pressure | | Upper response pressure | |
| Feder Nr. | Farbe [RAL] | $W_{ds\,u}$ [mbar] | $\Delta p_{wu}$ [mbar] | $W_{ds\,o}$ [mbar] | $\Delta p_{wo}$ ** [mbar] | $W_{ds\,u}$ [mbar] | $\Delta p_{wu}$ [mbar] | $W_{ds\,o}$ [mbar] | $\Delta p_{wo}$ ** [mbar] |
| FE 900 | 1028 | 35 - 50 | 50 | | | 120 - 180 | 500 | | |
| FE 901 VA | 2002 | 50 - 80* | 50 | | | 150 - 280* | 500 | | |
| FE 902 VA | 6010 | 70 - 105 | 50 | | | 280 - 480 | 500 | | |
| FE 903 | 5015 | 100 - 140 | 50 | | | 330 - 500 | 500 | | |
| FE 904 VA | 9005 | 110 - 160 | 50 | | | 400 - 550 | 500 | | |
| FE 905 VA | 9010 | 150 - 205 | 50 | | | 550 - 800 | 500 | | |
| FE 906 | 4002 | 200 - 300 | 50 | | | 800 - 1200 | 500 | | |
| FD 910 | 1028 | | | 90 - 125 | 50 | | | | |
| FD 911 | 2002 | | | 120 - 210 | 50 | | | | |
| FD 912 | 6010 | | | 200 - 330 | 50 | | | | |
| FD 913 | 5015 | | | 285 - 460 | 50 | | | | |
| FD 914 | 9005 | | | 450 - 680 | 50 | | | | |
| FD 915 | 9010 | | | 640 - 1040 | 50 | | | 2200 - 4000 | 300 |
| FD 916 | 3020 | | | 1030 - 1480 | 50 | | | 3400 - 4750 | 300 |
| FD 917 | 5010 | | | 1450 - 2200 | 50 | | | 4700 - 7400 | 300 |
| FD 918 | 9006 | | | 1900 - 3500 | 50 | | | 7200 - 8000 | 300 |
| FD 919 | 4002 | | | | 50 | | | | |



© 11.2023_04

| | | RS 250: DN 150 - 200 / RS 251: DN 100 large ball lock | | | | | | | |
|---|---|---|---|---|---|---|---|---|---|
| | | ND | | | | MD | | | |
| | | to $W_{ds\,o}$ 200mbar | | | | to $W_{ds\,o}$ 300mbar | | | |
| Spring data | | Lower response pressure | | Upper response pressure | | Lower response pressure | | Upper response pressure | |
| Feder Nr. | Farbe [RAL] | $W_{ds\,u}$ [mbar] | $\Delta p_{wu}$ [mbar] | $W_{ds\,o}$ [mbar] | $\Delta p_{wo}$ [mbar] | $W_{ds\,u}$ [mbar] | $\Delta p_{wu}$ [mbar] | $W_{ds\,o}$ [mbar] | $\Delta p_{wo}$ [mbar] |
| FM 400 | 1028 | 2 - 25 | 20 | | | 10 - 40* | 20 | | |
| FM 402 | 6010 | | | | | 35 - 115 | 20 | | |
| FM 404 | 9005 | | | | | 60 - 245 | 20 | | |
| FL 411 | 2002 | | | 28 - 76 | 20 | | | | |
| FL 412 | 6010 | | | 48 - 114 | 20 | | | 40 - 180 | 20 |
| FL 413 | 5015 | | | 93 - 200 | 20 | | | 70 - 300 | 20 |
| FL 415 | 9010 | | | | | | | | |
| FL 417 | 4010 | | | | | | | | |

| | | RS 250: DN 150 - 200 / RS 251: DN 100 large ball lock | | | | | | | |
|---|---|---|---|---|---|---|---|---|---|
| | | MD-R | | | | HD | | | |
| | | bis $W_{ds\,o}$ 3500mbar | | | | bis $W_{ds\,o}$ 8000mbar | | | |
| Spring data | | Lower response pressure | | Upper response pressure | | Lower response pressure | | Upper response pressure | |
| Feder Nr. | Farbe [RAL] | $W_{ds\,u}$ [mbar] | $\Delta p_{wu}$ [mbar] | $W_{ds\,o}$ [mbar] | $\Delta p_{wo}$ [mbar] | $W_{ds\,u}$ [mbar] | $\Delta p_{wu}$ [mbar] | $W_{ds\,o}$ [mbar] | $\Delta p_{wo}$ [mbar] |
| FM 400 | 1028 | 20 - 180* | 50 | | | 0 - 250 | 500 | | |
| FM 402 | 6010 | 155 - 380 | 50 | | | 150 - 1000* | 500 | | |
| FM 404 | 9005 | 200 - 950 | 50 | | | 650 - 2050 | 500 | | |
| FL 411 | 2002 | | | | | | | | |
| FL 412 | 6010 | | | 145 - 670 | 50 | | | 380 - 1400 | 300 |
| FL 413 | 5015 | | | 270 - 1230 | 50 | | | 800 - 2800 | 300 |
| FL 415 | 9010 | | | 1200 - 3500 | 50 | | | 3200 - 5500 | 300 |
| FL 417 | 4010 | | | | | | | 4500 - 8000 | 300 |

**Determining the upper response pressure**

| Outlet pressure $P_d$ (mbar) | Upper response pressure $W_{dso}$ *** |
|---|---|
| ⩽200 | $P_d$ +100 mbar |
| >200 - ⩽800 | $P_d$ x 1.5 |
| >800 - ⩽1600 | $P_d$ x 1.3 |
| >1600 | $P_d$ +500 mbar |

*) if possible not greater than 450 mbar

**) If the control device is set up for simultaneous monitoring of upper and lower response pressures, the difference between the setpoints for the upper and lower response pressures ($p_{dso}$ and $p_{dsu}$) should be at least 10% greater than the total of values given for $\Delta p_{wo}$ and $\Delta p_{wu}$.

***) The upper response pressure is rounded up to full tens, for example 251 mbar-> 260 mbar



© 11.2023_04

## 7.7 Decommissioning

For decommissioning, please refer to the documents listed under item 1 “General Information” and the system operator's work instruction.

**Procedure (fig. 7.1)**

- Slowly close the outlet shut-off valve (item 7.13) or
- Close the ball valve upstream of the valves and fittings (item 7.01).
- Depressurize the system (item 7.11).
- Close the venting ball valve (item 7.11).

# 8 Maintenance

## 8.1 Maintenance Plan

The following sections describe the maintenance work required for optimal and trouble-free operation of the device.
If increased wear is detected during regular inspections, the required maintenance intervals must be shortened in accordance with the actual wear.
For any questions on maintenance work and intervals, please contact the manufacturer.
The intervals for monitoring and maintenance work are strongly dependent on the operating situation and the condition of the gas. This is why no fixed intervals can be given. For Germany, it is recommended that the maintenance periods as specified in DVGW work sheet G 495 are observed initially. For each system, this must be followed by determining the maintenance interval independently on a medium-term basis.

During maintenance work, the components must be cleaned and subjected to a thorough visual inspection. This is also necessary if irregularities in the operating behavior have been detected during operation or during functional tests.

Damaged parts and O-rings dismounted during dismantling must be replaced with new ones.

It is recommended to stock the parts listed in chapter 11.3 for maintenance work.

| Interval | Maintenance work | Personnel |
|---|---|---|
| According to the data given in the DVGW work sheet G 495 or if necessary | Replacing O-rings | Qualified person |
| | Replacing diaphragms | |
| | Replacing the valve plate | |


© 11.2023_04

## 8.2 Maintenance Procedure

The maintenance procedure is described in detail step-by-step in our video tutorial and our pictorial descriptions. Instructions for our products can be found in the download area of our website. Should you have any problems, please feel free to contact us directly.

**ATTENTION**



If components have been removed, make sure they are mounted correctly, reinstall all fastening elements and observe the screw tightening torques.

Prior to recommissioning, observe the following:

**DANGER**



- Make sure that all maintenance work has been carried out and completed in accordance with the data and information given in these instructions.
- Make sure that no unauthorized persons stay in the danger zone.
- Make sure that all covers and safety devices have been installed and are working properly.

For recommissioning, please refer to the relevant manufacturer's documentation of the gas pressure regulator installed in the system or chapter 1 and 5.4 as well as the work instructions of the system operator, and the other safety regulations for the system in which the regulator is installed.

**Note**

To guarantee smooth operation, we recommend always keeping a maintenance set in reserve.



© 11.2023_04

## 8.3 Table of Screw Tightening Torques $M_A$ *

| Item no. | Exception | RS 250 / 025<br>RS 250 / 050<br>RS 250 / 080<br>RS 250 / 100<br>RS 251 / 050 | RS 250 / 150<br>RS 250 / 200<br>RS 251 / 080<br>RS 251 / 100 |
|---|---|---|---|
| 50 | | M8 / 18 Nm | M10 / 36 Nm |
| | | M10 / 36 Nm | |
| 51 | | M8 / 18 Nm | M10 / 36 Nm |
| 52 | | M8 / 18 Nm | M10 / 36 Nm |
| | DN 200 | | M12 / 62 Nm |
| 53 | | M8 / 18 Nm | M10 / 32 Nm |
| | DN 200 | | M12 / 62 Nm |
| 54 | | M6 / 8 Nm | M8 / 18 Nm |

Max. flange tightening torques
see chapter 7.2 Mounting

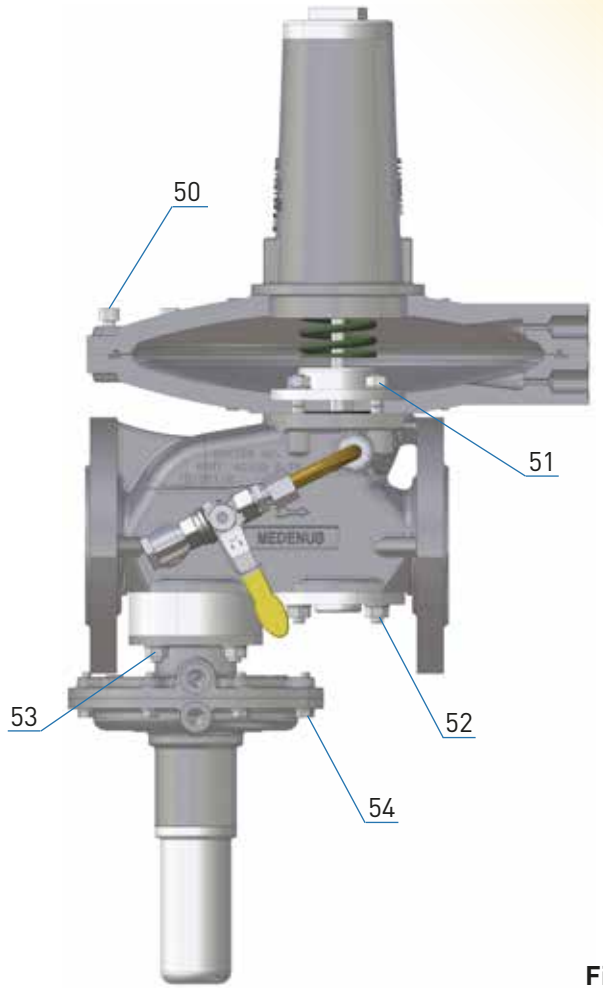


**Fig. 8.1**

## 8.4 Lubricants Table

| Components (apply a thin layer) | Lubricants |
|---|---|
| All O-rings | Syntheso Proba 270 |
| All fastening and locking screws | |
| Balls | |

## Oxygen model

For oxygen versions, all parts must be cleaned with oxygen cleaner.
For oxygen versions, only suitable grease with approval for oxygen according to the BAM list may be used.

**ATTENTION**



## 8.5 Screw Retention

| Components (apply a thin layer) | Adhesive and sealing agent |
|---|---|
| Stud bolts | Loctite-648 |

*) Guide values may differ depending on the device/lubrication



© 11.2023_04

# 9 Troubleshooting

## 9.1 Gas Pressure Regulator

| Description of the error | Possible cause | Elimination |
|---|---|---|
| Closing pressure too high<br>No closing pressure | Actuator dirty or damaged | Check valve plate (seal) and valve seat for damage and dirt, replace valve plate, if necessary |
| | Static sealing elements defective | Replace O-rings |
| | Clamping of the compensating diaphragm has come off<br>Compensating membrane is damaged or mounted incorrectly | Check compensating diaphragm for fastening, damage, and correct fit, replace it, if necessary |
| | Valve plate has become disconnected from the valve stem | Tighten nut under the valve plate |
| | Valve plate dirty or damaged | Clean the valve plate (use exclusively NBR-compatible cleaning agent) |
| Unstable outlet pressure curve (vibrations, pulsation) | Device is working in the closing pressure range | Check the regulator configuration |
| | Vibration resonance in the control system | Install restrictor plate in breather line<br>Install baffle plate in measuring line (chap. 12.6)*. Install a stronger spring (setpoint spring of thwe next higher control range)<br>Check setting of gas consumption devices<br>Use of throttle valve RSD3 (optional accessory) |
| Control deviation too large / setpoint is not reached | Unfavorable connection of the measuring line | Select a measuring point with steady flow, check measuring point |
| | Sluggishness of the device due to dirt | Subject device to maintenance |
| | Main diaphragm or compensating diaphragm defective or mounted incorrectly | Check diaphragm and replace it, if necessary |
| | Wrong regulator size selected<br>Wrong setpoint spring selected<br>Wrong control cone selection | Check regulator configuration, setpoint spring / control cone and replace if necessary |
| | Inlet pressure supply is insufficient (pressure losses in the supply line too high) | Increase inlet pressure<br>Check pipeline cross-section<br>Check built-in filter |
| Inadmissible pressure peak<br>Dynamic closing pressure too high | Damping of the device too high<br>Control system too dynamic | Continue opening restrictor (throttle valve RSD3 available as an option) in measuring line by turning anticlockwise<br>Remove restrictor plate from breather line<br>Check breather lines and dimension them larger, if necessary. Replace breather valve with safety diaphragm or breather line |
| | Closing speed of downstream shut-off devices too high | Reduce closing speed of shut-off valve |
| Noise | Gas velocity too high | Check the regulator configuration |
| | Sluggishness of the device due to dirt / wear | Perform maintenance on actuator<br>If worn-out mechanically, replace it, if necessary |
| Gas escapes through breather line | Fastening of the main diaphragm has come off<br>Main diaphragm is damaged or has been mounted incorrectly | Check diaphragm for fastening, damage, and correct fit |
| | Internal leakage gas SRV is set too low or is not tight | Correct settings of leakage gas SRV<br>Check O-ring for damage and dirt, replace if necessary |

*) Excessive damping limits the actuation speed.
**) Normal flow noise does not constitute a fault. However, this noise can be reduced by installing a noise reduction device.

**Note**


© 11.2023_04

## 9.2 Safety Shut-Off Valve

| Description of the error | Possible cause | Elimination |
|---|---|---|
| No internal tightness in closed position | Actuator dirty or damaged | Check valve seat and valve plate (seal) for damage and dirt |
| | Pressure compensation valve (internal bypass) in the actuator dirty or sealing elements damaged | Check O-rings in the pressure compensation valve or at the SSV spindle and replace them, if necessary |
| SSV cannot be opened | No pressure compensation at actuator | Pressure compensation by opening the bypass ball valve |
| SSV cannot be engaged | Difference between response pressure and operating pressure or between upper and lower response pressure is too small | Correct response pressure settings consider required re-engagement differential (see RS 250 / 251 product overview) |
| | Only in case of underpressure switching: Diaphragm in the control device defective or incorrectly installed | Check diaphragm and replace it, if necessary |
| | Pressure at the measuring point too high or low (only with underpressure switching) | Lower or increase pressure at measuring point to operating value (GPR setpoint value) |
| | Sluggishness of the trigger mechanism due to dirt / wear | Service switching device and replace if worn-out mechanically |
| Permissible response pressure group is exceeded Irregularities in response behavior | Difference between response pressure and operating pressure or between upper and lower response pressure is too small | Correct response pressure settings consider required re-engagement differential (see RS 250 / 251 product overview) * |
| | Diaphragm in the control device incorrectly installed | Check diaphragm for irregular tension |
| | Sluggishness of the trigger mechanism due to dirt / wear | Service switching device and replace if worn-out mechanically |
| Gas escapes through breather line | Diaphragm clamping has become loose Diaphragm is damaged or has been mounted incorrectly O-ring sealing (item 35) dirty or damaged | Check diaphragm for fastening, damage, and correct fit Check O-ring and replace it, if necessary |
| SSV frequently shuts off | Stopcock upstream of SRV is closed | Open stopcock |
| | SSV set too low or SRV set too high | Check SSV and SRV settings |

*) The pressure differences between GPR, SSV and system SRV must consider the response and closing pressure groups as well as the re-engagement differentials of the devices in order to avoid any unintended SSV switching.

**Note**



© 11.2023_04

## 10 Replacement and Disposal

After the device has reached the end of its useful life, it must be dismounted and disposed of in an environmentally compatible manner.
During dismounting, components that may present a risk of injury by contamination, depending on the medium, are removed. Depending on the processed medium, the components must be properly decontaminated. Diffusible components (diaphragm, O-ring, etc.) may have to be taken to a special disposal unit, depending on the medium used.

**ATTENTION**



If no return or disposal agreement
has been signed, dismantled components should be recycled:

- Metals should be scrapped
- The remaining components should be disposed of after sorting according to material.

Alternatively, scrapping by MEDENUS can be agreed with the service. The return is at your own expense, the disposal by MEDENUS is free of charge.

**For technical information, please contact our customer service:**

MEDENUS Gas-Druckregeltechnik GmbH
Im Langen Feld 3
D-57462 Olpe

Phone +49 (0) 2761 / 82788-0
Fax +49 (0) 2761 / 82788-9

E-mail service@medenus.de
Internet www.medenus.de

In addition, we are always interested in information, suggestions and experience resulting from the application and which can be valuable for improving our products.

**Note**

# 11 Spare Parts

## 11.1 Spare Parts Drawing RS 250 / RS 251 DN 25 - DN200

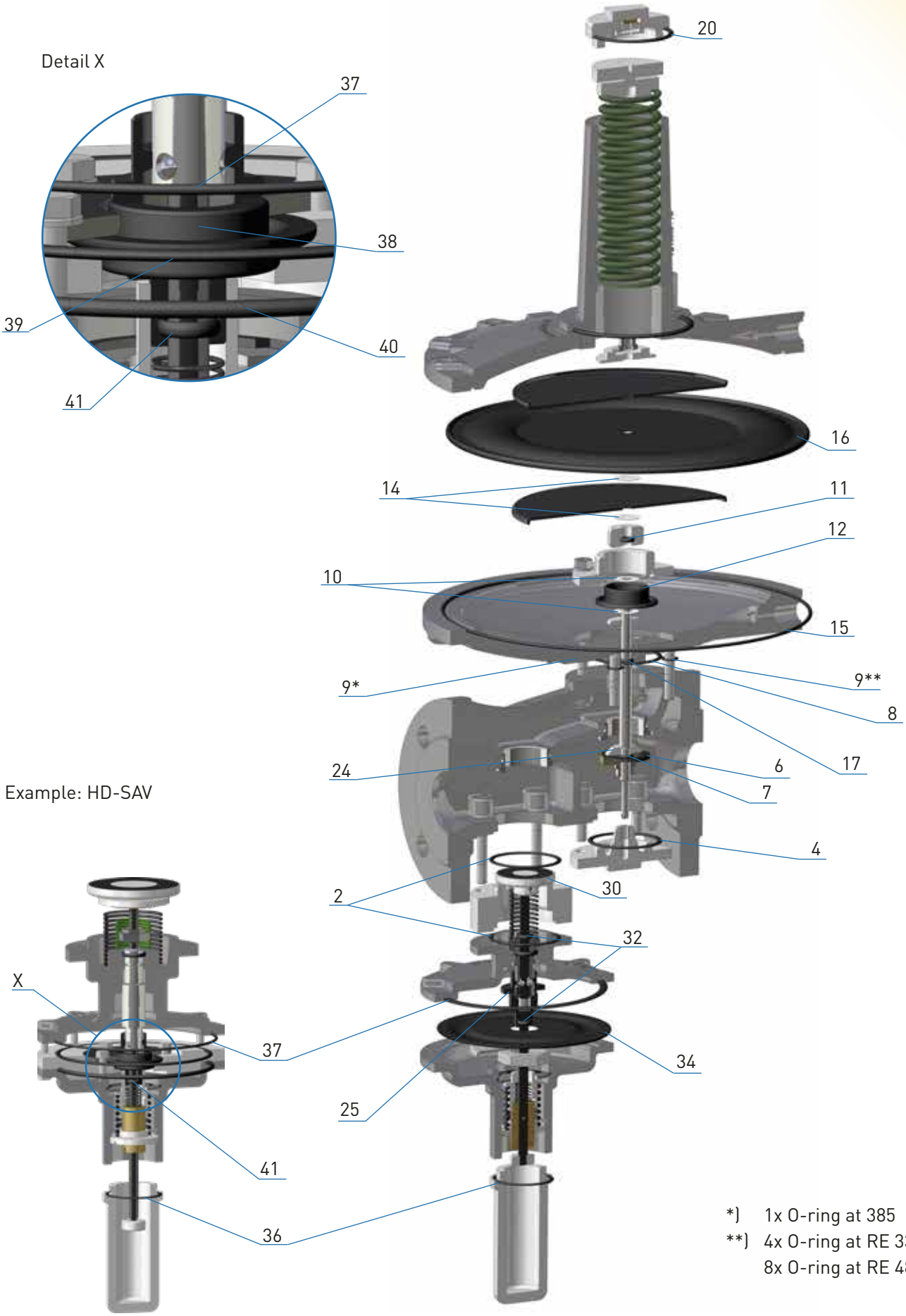


*) 1x O-ring at 385
**) 4x O-ring at RE 330 / 390
8x O-ring at RE 485

**Fig. 11.1**



© 11.2023_04

## 11.2 Optional Spare Parts Drawing

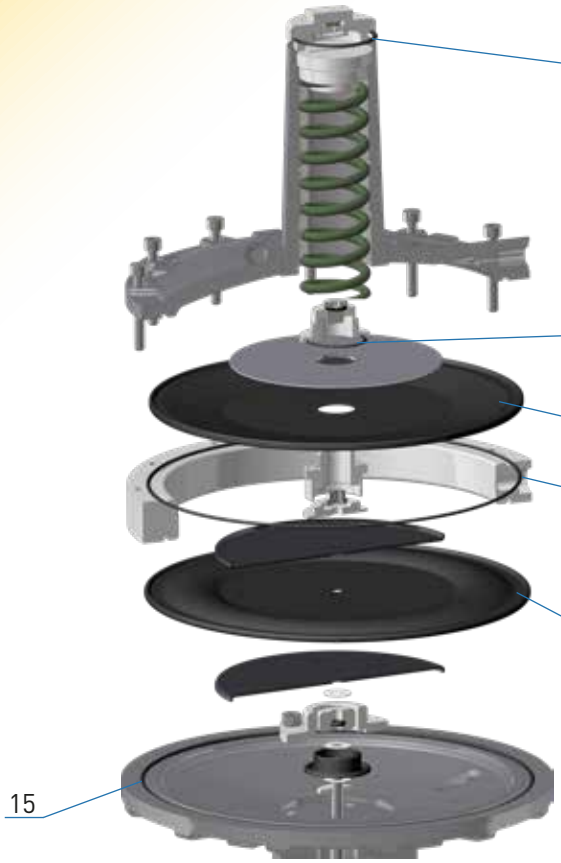


**Fig. 11.2**

RS 250 / 251 shown with safety diaphragm (version 1)

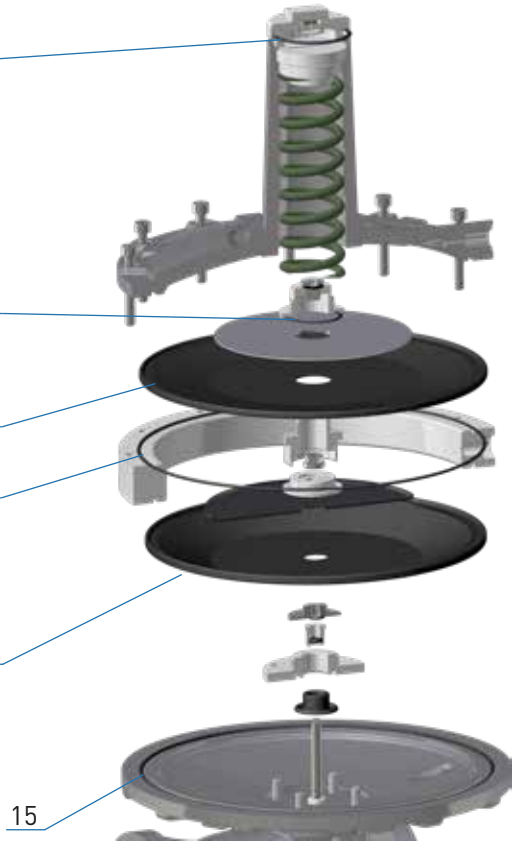


**Fig. 11.3**

RS 250 / 251 shown with safety diaphragm (version 2)




**Fig. 11.4**

RS 250 / 251 shown with noise reduction

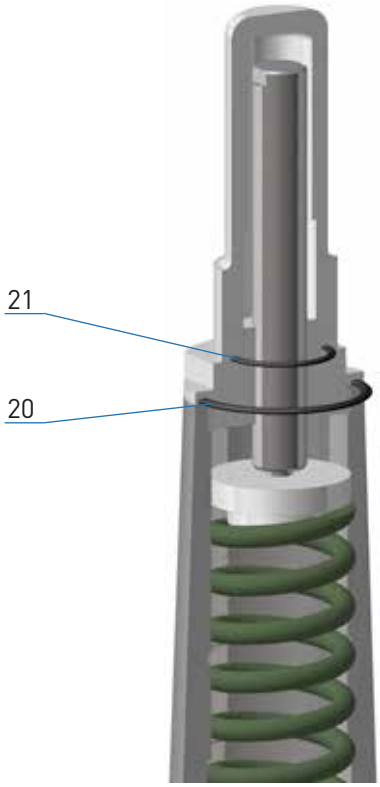


**Fig. 11.5**

RS 250 / 251 shown with HDS high-pressure screw spindle



© 11.2023_04

## 11.3 Parts for Maintenance Work

### Main diaphragm and O-ring

| Item no. | Name | Quantity pcs. | RS 250 / 025<br>RS 250 / 050 | | | RS 250 / 080; RS 250 / 100; RS 251 / 050<br>RS 251 / 080; RS 250 / 150; RS 251 / 100; RS 250 / 200 | | | | |
|---|---|---|---|---|---|---|---|---|---|---|
| | | | RE 160 | RE 205 | RE 330 | RE 205 | RE 275 | RE 385 / RE 390 MB | RE 385 / RE 390 GMB | RE 485 |
| 15 | O-ring | 1 | | O-029 | O-033 | O-029 | O-041 | O-042 | O-042 | O-043 |
| | O-ring | 1 | | | O-054 | | | | | |
| 16 | Diaphragm | 1 | M-111 | M-121 | M-141 | M-122 | M-132 | M-152 | M-162 | M-172 |
| **Main diaphragm set (version 1) order number:** | | | **M-111** | **MS-121** | **MS-141** | **MS-122** | **MS-132** | **MS-152** | **MS-162** | **MS-172** |
| 15 | O-ring | 1 | | O-029 | O-033 | O-029 | O-041 | O-042 | O-042 | O-043 |
| | O-ring | 1 | | | O-054 | | | | | |
| 16 | Diaphragm | 1 | M-112 | M-122 | M-142 | M-122 | M-132 | M-152 | M-162 | M-172 |
| **Main diaphragm set (version 2) order number:** | | | **M-112** | **MS-122** | **MS-142** | **MS-122** | **MS-132** | **MS-152** | **MS-162** | **MS-172** |

### Intermediate diaphragm

| Item no. | Name | Quantity pcs. | Valve | RS 250 / 025<br>RS 250 / 050 | RS 250 / 080<br>RS 250 / 100<br>RS 251 / 050 | RS 251 / 080 | RS 250 / 150<br>RS 251 / 100 | RS 250 / 200 |
|---|---|---|---|---|---|---|---|---|
| 12 | Diaphragm | 1 | 17.5 | **M-001** | | | | |
| | | | 27.5 | **M-002** | **M-003** | | | |
| | | | 32.5 | **M-004*** | **M-005** | **M-005** | | |
| | | | 42.5 | | **M-006** | **M-007** | **M-007** | |
| | | | 52.5 | | **M-008**** | **M-009** | **M-009** | |
| | | | 65 | | | **M-010** | **M-010** | |
| | | | 85 | | | **M-011** | **M-011** | |
| | | | 95 | | | | **M-012** | **M-012** |
| | | | 115 | | | | | **M-013** |

### Valve plate

| Item no. | Name | Quantity pcs. | Valve | RS 250 / 025<br>RS 250 / 050 | RS 250 / 080<br>RS 250 / 100<br>RS 251 / 050 | RS 251 / 080 | RS 250 / 150<br>RS 251 / 100 | RS 250 / 200 |
|---|---|---|---|---|---|---|---|---|
| 6 | Valve plate | 1 | 17.5 | **VT-001** | | | | |
| | | | 27.5 | **VT-002** | **VT-003** | | | |
| | | | 32.5 | **VT-004*** | **VT-005** | **VT-005** | | |
| | | | 42.5 | | **VT-006** | **VT-006** | **VT-006** | |
| | | | 52.5 | | **VT-007**** | **VT-007** | **VT-007** | |
| | | | 65 | | | **VT-008** | **VT-008** | |
| | | | 85 | | | **VT-009** | **VT-009** | |
| | | | 95 | | | | **VT-010** | **VT-010** |
| | | | 115 | | | | | **VT-011** |

*) only for RS250 / 050 **) only for RS250 / 100 and RS251 / 050



© 11.2023_04

## Valve Plate SSV / Diaphragm SSV

| Item no. | Name | Quantity | Exception | RS 250 / 025<br>RS 250 / 050 | RS 250 / 080<br>RS 250 / 100<br>RS 251 / 050 | RS 251 / 080 | RS 250 / 150<br>RS 251 / 100 | RS 250 / 200 |
|---|---|---|---|---|---|---|---|---|
| 30 | Valve plate | 1 | | **VT-201** | **VT-202** | **VT-206** | **VT-208** | **VT-210** |
| 34 | Diaphragm | 1 | | **M-201** | **M-201** | **M-201** | **M-202** | **M-202** |
| 38 | Diaphragm | 1 | only for HD-SSV | **M-014** | **M-014** | **M-014** | **M-015** | **M-015** |

## O-Ring and Sealing Ring Sets

| Item no. | Name | Quantity pcs. | Exception | RS 250 / 025<br>RS 250 / 050 | RS 250 / 080<br>RS 250 / 100<br>RS 251 / 050 | RS 251 / 080 | RS 250 / 150<br>RS 251 / 100 | RS 250 / 200 |
|---|---|---|---|---|---|---|---|---|
| 2 | O-ring | 1 | | O-014 | O-018 | O-036 | O-044 | O-046 |
| | | 2 | DN 50 | O-014 | | | | |
| | | 2 | before 1992 | | | O-036 | | |
| 4 | O-ring | 1 | | O-014 | O-018 | O-037 | O-044 | O-046 |
| 7 | O-ring | 1 | | O-007 | O-009 | O-009 | O-009 | O-009 |
| 8 | O-ring | 1 | | O-014 | O-035 | O-038 | O-026 | O-026 |
| | | | RE 330 | O-004 | | | | |
| 9 | O-ring | 1 | | O-019 | O-039 | O-040 | O-031 | O-031 |
| | | 4 | RE 330 | O-002 | | | | |
| | | | RE 390 | | O-002 | | | |
| | | 8 | RE 485 | | | | O-003 | O-003 |
| 10 | NBR ring | 2 | | N-001 | N-002 | N-002 | N-002 | N-002 |
| | | | Valve 27.5 | | N-001 | | | |
| | | | Valve 17.5 | NO NBR-RING | | | | |
| 11 | O-ring | 1 | | O-007 | O-009 | O-009 | O-009 | O-009 |
| | | | Valve 27.5 | | O-007 | | | |
| 14 | NBR ring | 2 | | N-001 | N-003 | N-003 | N-003 | N-003 |
| 17 | O-ring | 1 | | O-008 | | | | |
| 20 | O-ring | 1 | | O-015 | O-015 | O-036 | O-036 | O-036 |
| | | | Cast sealing cap | O-014 | O-014 | O-015 | O-015 | O-015 |
| 21 | O-ring | 1 | | O-012 | O-012 | O-016 | O-016 | O-016 |
| 24 | O-ring | 1 | | O-007 | O-009 | O-009 | O-009 | O-009 |
| 25 | O-ring | 1 | | O-001 | O-001 | O-001 | | |
| 32 | O-ring | 2 | | O-007 | O-007 | O-007 | O-009 | O-009 |
| 36 | O-ring | 1 | | O-013 | O-013 | O-013 | O-014 | O-014 |
| 37 | O-ring | 1 | | O-052 | O-052 | O-052 | | |
| | | | | | | | | |
| **O-ring set order number:** | | | | **OS-001** | **OS-002** | **OS-003** | **OS-004** | **OS-005** |
| **O-ring set order number (for actuator with HD-SSV):** | | | | **OS-301** | **OS-302** | **OS-303** | **OS-304** | **OS-305** |


© 11.2023_04

## Safety diaphragm

| Item no. | Name | Quantity pcs. | RS 250/ 025<br>RS 250 / 050 | | RS 250 / 080; RS 250 / 100; RS 251 / 050<br>RS 251 / 080; RS 250 / 150; RS 251 / 100; RS 250 / 200 | | | |
|---|---|---|---|---|---|---|---|---|
| | | | RE 205 | RE 330 | RE 205 | RE 275 | RE 385 / RE 390 | RE 485 |
| 22 | O-ring | 1 | O-029 | O-033 | O-029 | O-041 | O-042 | O-043 |
| | O-ring | 1 | | O-054 | | | | |
| 23 | Diaphragm | 1 | M-123 | M-143 | M-123 | M-133 | M-163 | M-173 |
| 26 | O-ring | 1 | O-013 | O-013 | O-013 | O-013 | O-013 | O-013 |
| **Safety diaphragm set order number:** | | | **MS-123** | **MS-143** | **MS-123** | **MS-133** | **MS-163** | **MS-173** |

## Spare Part Order Example:

| Designation: | Type | DN - Nominal width | RE - Diaphragm assembly | D - Nozzle (valve diameter) | SSV Control device | Main diaphragm | Option |
|---|---|---|---|---|---|---|---|
| Gas pressure regulator: | RS250 | 080 | 390* | 27.5 | MD-R | MB* | SM... |

Spare parts according to tables in 11.3

Main diaphragm and O-ring: **MS-152**
Intermediate diaphragms: **M-003**
Valve plate: **VT-003**
Valve plate SSV: **VT-202**
Diaphragm SSV: **M-201**
O-ring and sealing ring set: **OS-002**
Safety diaphragm: **MS-163**

The allocation of individual parts is done according to the item no. in the tables in 11.3, conforming to the spare parts drawings in 11.1. and 11.2.

**Note**

When ordering, please specify the fabrication no. shown on the nameplate.

**Note**

Example: Composition of the fabrication no.:




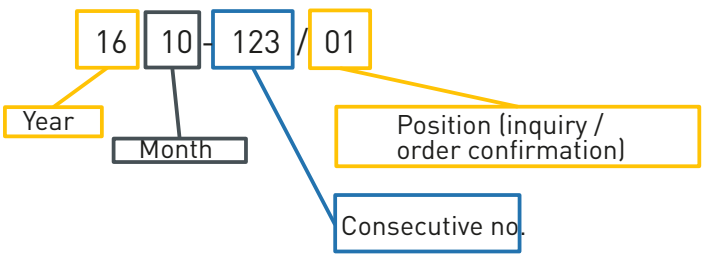


Spare parts must only be replaced by trained and authorized persons.

**ATTENTION**

*) When selecting the main diaphragm set for control device RE 385 / 390, a distinction has to be made between MB and GMB. The GMB diaphragm is standard equipment and is therefore not mentioned separately in the controller designation.


© 11.2023_04

## Notes


© 11.2023_04

# 12 Accessories / Options

## 12.1 Noise Reduction



### 12.1.1 Use

- Gas pressure regulators RS 250 / RS 251
- Gas pressure regulators RS 254 / RS 255
- Gas pressure regulators RSP 254 / RSP 255
- Gas pressure regulators R101

### 12.1.2 Application / Function

The noise reduction made of metallic foam is inserted into the housing of the gas pressure regulator between the valve seat and the housing cover and reduces noise in the gas pressure regulator produced by the flow rate by up to -15 dB (±3 dB).

### 12.1.3 Mounting

- Unscrew the cover
- Slide the noise reduction (metallic foam) over the spindle and the valve plate until it makes contact with the valve seat.
- Screw down the cover again, thus pressing the noise reduction firmly against the valve seat*





© 11.2023_04

## 12.1.4 Determination of the sound pressure level $L_A$

The noise of gas expansion at a maximum flow rate of approx. 65 m/s on the outlet side is shown.

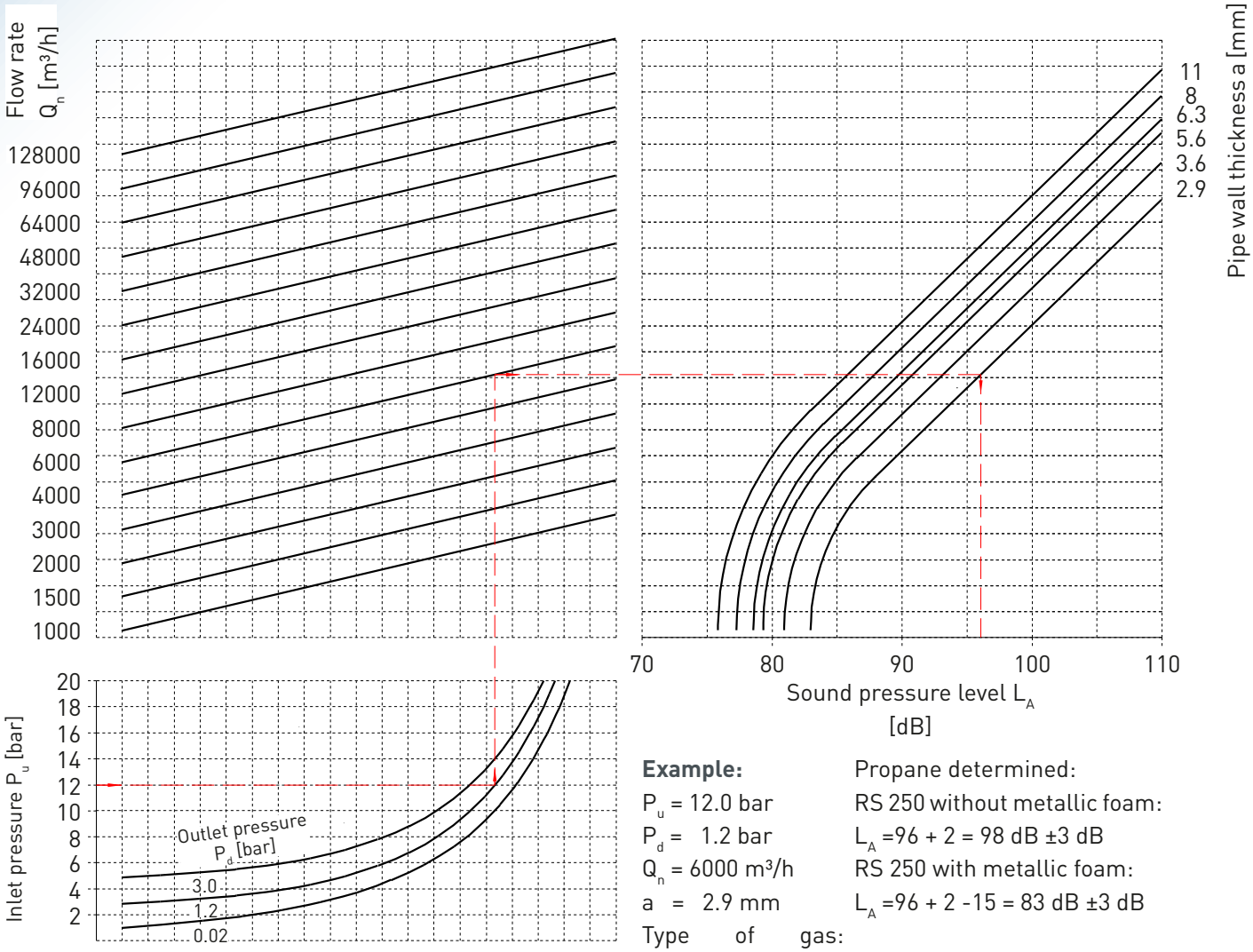


**Example:**

$P_u$ = 12.0 bar
$P_d$ = 1.2 bar
$Q_n$ = 6000 m³/h
a = 2.9 mm
Type of gas: Propane determined:
RS 250 without metallic foam:
$L_A$ =96 + 2 = 98 dB ±3 dB
RS 250 with metallic foam:
$L_A$ =96 + 2 -15 = 83 dB ±3 dB

Reference site: Outlet of the gas pressure regulator, lateral distance 1m
Accuracy: ±3 dB
Correction factor for metallic foam design: $\Delta L_A$ up to -15 dB

Correction factors for some gases and gas mixtures

| Gas, gas mixtures | $\Delta L_A$ [dB] |
|---|---|
| Acetylene | 0 |
| Natural gas | 0 |
| Helium | -5.5 |
| Air | +1 |
| Methane | 0 |
| Propane | +2 |
| Hydrogen | -9 |


© 11.2023_04

## 12.2 High-Pressure Spindle



### 12.2.1 Use

- Gas pressure regulators RS 250 / RS 251
- Gas pressure regulators RS 254 / RS 255
- Gas pressure regulators R 100 / R 100-U
- Gas pressure regulators R101

### 12.2.2 Application / Function

The HDS high-pressure spindle is used for simplified adjustment of the control spring in the gas pressure regulator. For the adjustment of particularly strong control springs, the use of a high-pressure spindle is mandatory (Chapter 7.5).

### 12.2.3 Mounting

- Unscrew the sealing cap
- Unscrew the setting screw anticlockwise
- Take off the spring plate from the spring
  **Attention! Do not lose the steel ball!**
- Remove the built-in spring
- Insert a new spring
- Insert spring plate again
  **Attention! Do not forget the steel ball!**
- Screw high-pressure cap with high-pressure spindle into the spring dome

  **Do not forget the O-ring!**
- On the widths across flats (AF 17) of the spindle, set the regulator to the desired output pressure.
- Screw on the sealing cap
  **Do not forget the O-ring!**

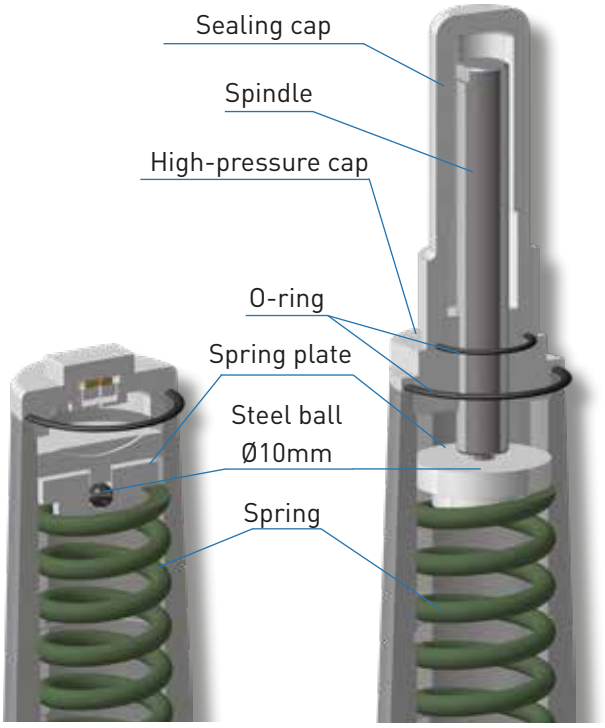


Standard model HD spindle design

### 12.2.4 Mounting instructions

- **Setting with HD spindle (small spring dome / Ø 70mm)**
  - Screw-in depth T min: 111 mm
  - Screw-in depth T max: 65 mm
- **Setting with HD spindle (large spring dome / Ø 105mm)**
  - Screw-in depth T min: 130 mm
  - Screw-in depth T max: 70 mm
- **Dismounting height HD spindle (small spring dome / Ø 70mm)**
  - X: 260 mm
- **Dismounting height HD spindle (large spring dome / Ø 105mm)**
  - X: 410 mm

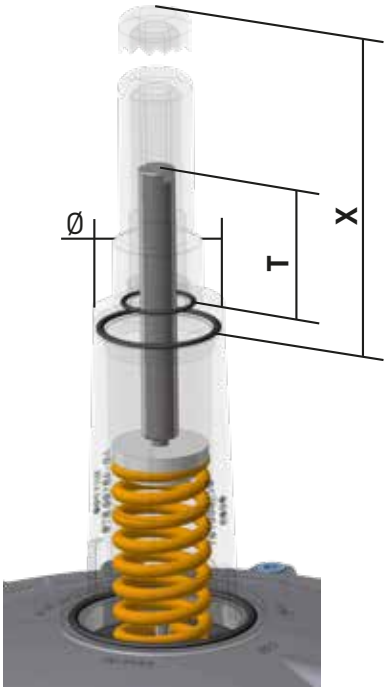


**ATTENTION** All threads must be oiled!



© 11.2023_04

## 12.3 AV 530 breather valve

### 12.3.1 Use



- On SSV control devices
- On regulators (pilots)
- With low-dynamic regulation sections (one full stroke)
- On the SRV

**(Option not available for hydrogen version $H_2$)**

### 12.3.2 Application / Function

The breather valve is used as replacement for the costly and time-consuming laying of breather lines and for securing the installation room against inadmissible escape of gas from diaphragm comparator compartments of gas pressure regulators and safety shut-off valves.

Safety shut-off valves (SSV) of functional class A are triggered automatically and seal gas-tight.

In compliance with EN 12186:2014, the use of the AV guarantees that in case of a defect of the working diaphragm, escape of gas from the breather connection of the gas pressure regulator or of the safety shut-off valve of more than 30 l/h is prevented.

### 12.3.3 Technical Data

- **Type** AV
- **Max. allowable pressure PS** 25 bar
- **Max. operating pressure $p_{max}$** 25 bar
- **Max. allowable flow rate** 30 l/h
- **Connection type** Male thread G 1/4“
- **Temperature range class 2** (operating/ambient temperature) -20 °C to +60 °C

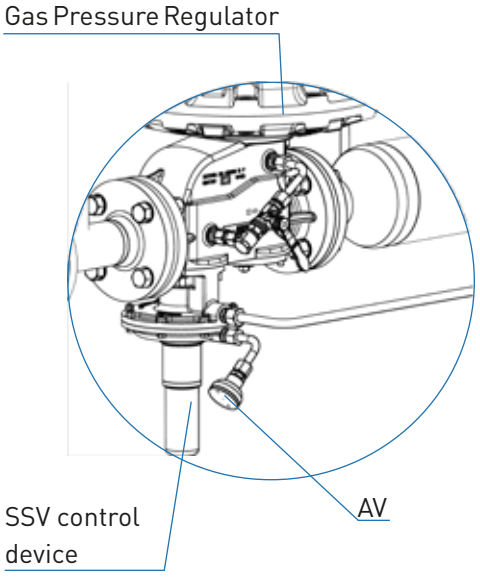


Application example on the SSV

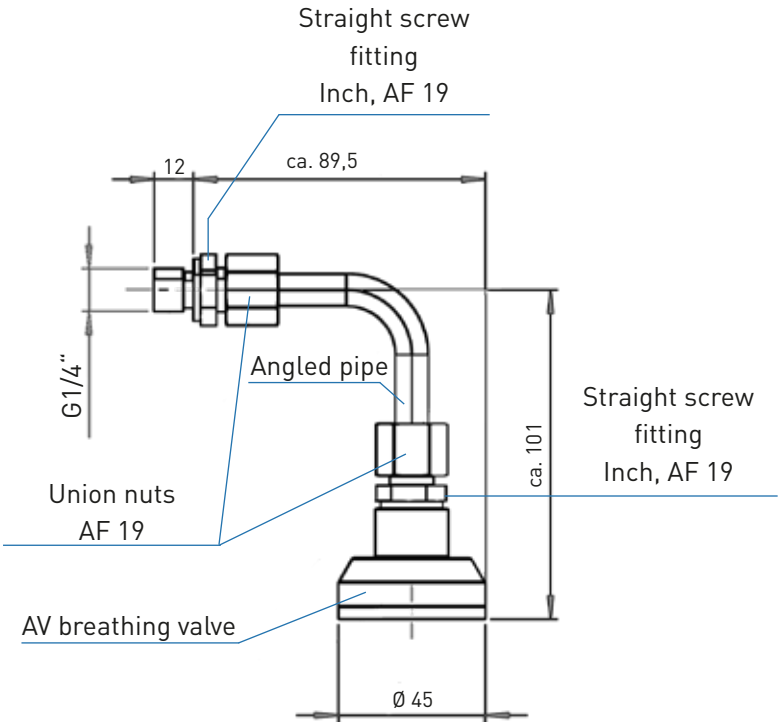




© 11.2023_04

## 12.4 RSD3 Restrictor Valve



### 12.4.1 Use

- For installation in the measurement line or breathing line of the control device

### 12.4.2 Application / Function

- For the finer adjustment of the control behavior of the regulator
- For a outlet pressure control without fluctuations in the low load range of the regulators

The RSD3 is a throttle valve which regulates the volume flow in the measurement line by means of a continuously adjustable cross-sectional reduction. The setting is made tool-free by means of a rotary knob and can be adjusted using a screw to be fixed. The throttle valve cannot be completely shut off, therefore a guaranteed minimum flow is ensured.

### 12.4.3 Technical Data

- **Type** RSD3
- **Max. allowable pressure PS** 25 bar
- **Max. operating pressure $p_{max}$** 25 bar
- **Connection type** on both sides G 1/4“
  Female thread
- **Material** corrosion-restistant steel
- **Temperature range, class 2** -20°C to +60°C
  (operating/ambient temperature)
- **Ex protection**
  The mechanical components of the device do not have any potential ignition sources of their own and are thus not covered by the scope of ATEX 2014/34/EU.

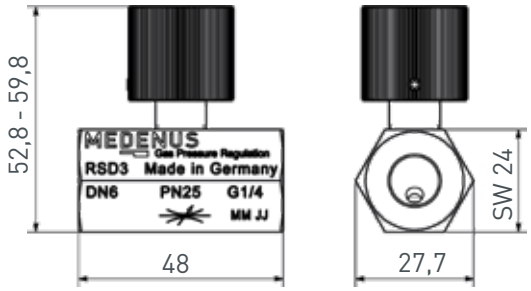


### 12.4.4 Application example

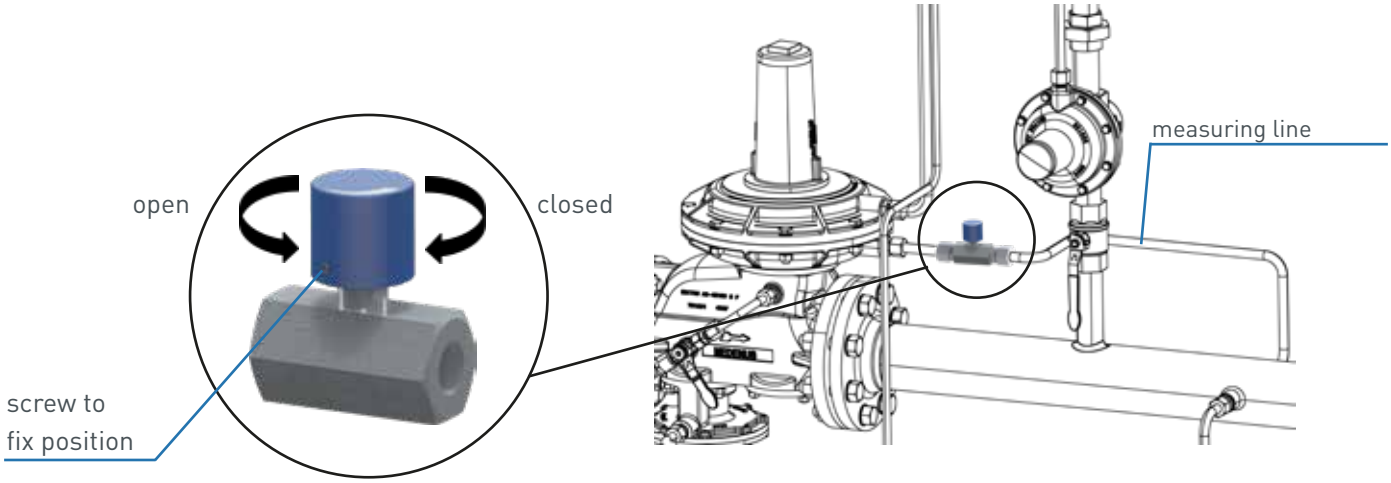



© 11.2023_04

## 12.5. Signal Transmitter / Reedcontact



### 12.5.1 Use

- On SSV-Control Devices

### 12.5.2 Application / Function

The signal transmitter is used in conjunction with Medenus GmbH-products to monitoring the position of the safety shut-off valve (closed or open position) by means of a remote display.
A built-in neodymium magnet in the pull knob of the SSV and a set switching distance to the reed contact allow the position of the SSV to be sensed by teh sensor. The signal is transmitted via remote display.
If the SSV switches into the closed position, the switching distance is exceeded and the sensor will lose the signal. This guarantees continuous monitoring of the SSV control device.

### 12.5.3 Technical Data

| **Signal transmitter mode** | **MR500A** |
|---|---|
| • Electrical Design | NAMUR |
| • Output function | Normally open |
| • Dimensions (mm) | 30,5 x 5 x 6,5 |
| • Weight (g) | 91,2 |
| • Ambient temperature (°C) | -25...70 |
| • Protection | IP 65; IP 67 |
| • Mounting | flush mountable |
| • Cylinder type | T-slot cylinder |
| • Display switching status | 1 x LED, yellow |
| • Connection to switching amplifiers | yes |
| • Switching amplifiers | Connection to certified intrinsically safe circuits with the max. values: U=15 V / I=50 mA / P=120 mW |
| • Nominal voltage DC (V) | 8,2 |
| • Current consumption (mA) | Target not detected ⩽ 1: Target detected ⩾ 2,2 |
| • Protection class | III |
| • Reverse polarity protection | yes |
| • Short-circuit protection | no |
| • Overload protection | no |
| • Response sensitivity (mT) | 2,1 |
| • Travel speed (m/s) | 10 |
| • Hysteresis (mm) | 1 |
| • Repeatability (mm) | < 0,2 |

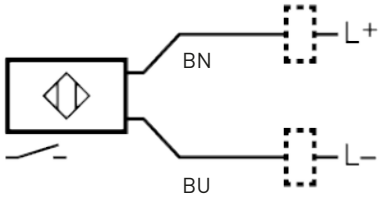


Core colours:
BN= brown
BU= blue

| | |
|---|---|
| • Max. fall time (ms) | 0,1 |
| • Max. switch time incl. bounce | 0,6 |
| • Approval | BVS 09 ATEX E164; IECEx BVS 09.0065 |

ATEX marking:

- Ex II 1G Ex ia IIC T4 Ga
- Ex II 1D Ex ia IIIC T135°C Da

- EMC:

| | |
|---|---|
| EN 61000-4-2 ESD | - kV CD / 8 kV AD |
| EN 61000-4-2 HF radiated | 10 V/m |
| EN 61000-4-4 Burst | 2 kV |
| EN 61000-4-6 HF conducted | 10 V |
| EN 55011 emission | class B |

| | |
|---|---|
| • MTTF (years) | 21140 |
| • Max. internal capacity (nF) | 10 |
| • Max. internal inductance (µH) | 400 |
| • Material housing: | PA |
| • Material fastening clamp: | stainless steel |

Remark: No LED function in case of polarity reversal in DC operation

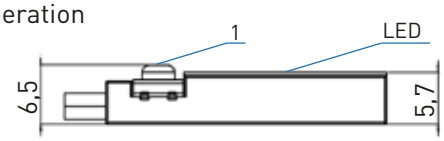


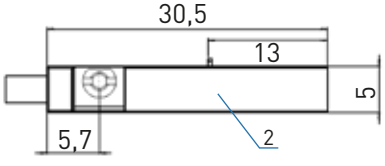


1 Fastening clamp with combined slot / Hexagon socket head AF 1,5
2 Sensing face

Source: ifm electronic GmbH - EN-GB-MR500A-25.02.2010



© 11.2023_04

### 12.5.4 Mounting

- Replace the pull knob of the SSV spindle with the pull knob with the neodymium magnet
- Slide the signal transmitter into the groove oft he SSV cap when SSV is open
- As soon as the operating indicator lights up: STOP! Assembly point has been reached.
- Fix the signal transmitter to the mounting point using a fine screwdriver or Allen key AF 1,5
- Perform a functional test: If the SAV cap is removed, the operating indicator must go out.

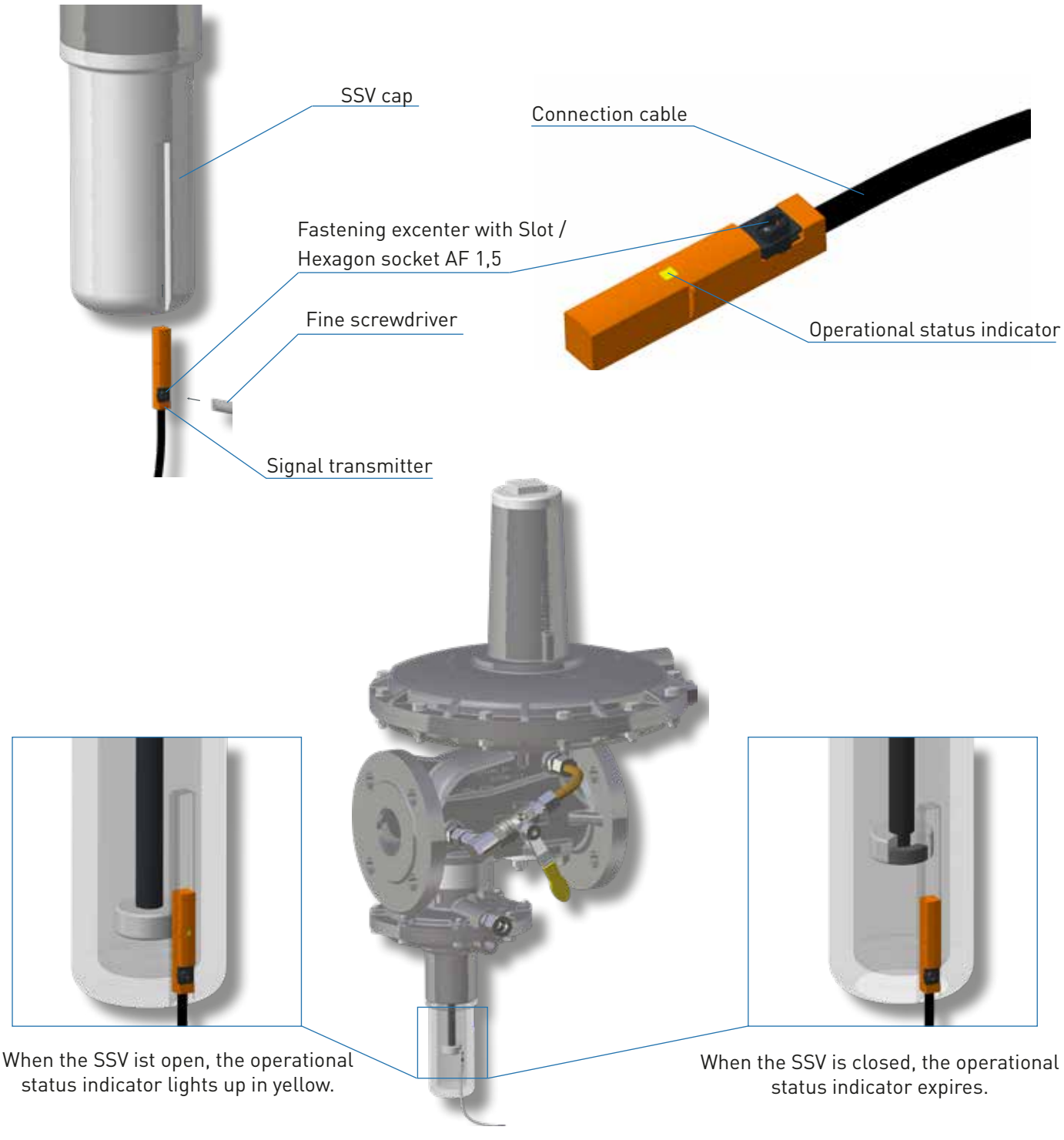



© 11.2023_04

## 12.5.5 Safety instructions

**Must be read prior to using the neodymium magnet!**
**Important safety instructions for general and responsible handling of the neodymium magnet**

Please pass on these instructions to all employees, customers and other people who are handling our products or parts derived from them.
Please read these instructions carefully before using the neodymium magnets. For any further questions, please feel free to contact us.
The company "magnets4you GmbH" shall not assume any liability for damage caused by improper handling of the magnets.

### Hazards caused by magnets







**Risk of injury caused by crushing**
**Risk of injury caused by splinters**
**Hazards caused by magnetic fields**
**Pacemakers, magnetic data carriers (credit cards, memory cards, etc.)**
**Electronic devices (mobile phones, computers, monitors, etc.)**
**Risk of fire**
**Health risks in contact with foods and drinking water**

### Handling

Do not place any iron-containing parts (tools, nails, knives, etc.) in the vicinity of the magnets.
Magnets can collide or adhere to other metallic surfaces, possibly resulting in splinters or brittleness.
Wear safety goggles and protective gloves – in order to avoid eye injuries and crushing!
Persons wearing pacemakers must not be exposed to magnetic fields.
Electronic devices and magnetic data carriers must be kept away from magnetic fields.
Magnets should not be processed mechanically, sawed or drilled.
The resulting drilling/magnet dust is extremely flammable.
Alternatively, magnets can be glued / sunk for fastening.
Keep the magnets away from open heat and flames!
The magnets are provided with a thin coating (nickel, gold or zinc) that can be removed or changed by excessive use.

It is recommended never to use AlNiCo magnets in direct contact with foods, since metal ions can dissociate in water-containing media.

### Transport

When shipping magnets, the current regulations for scattered magnetic fields during air transport must be observed (IATA Hazardous Goods Regulations).
These regulations also apply to built-in magnets.

Neodymium magnets and end products prepared from them may not be imported directly or indirectly to the following countries: USA, Canada and Japan.

### Increased caution for children

Keep neodymium magnets out of the reach of children. Children are at risk of playing with the magnets, inserting them into sockets, swallowing them or their fingers getting caught!
Children under the age of 10 should not handle magnets at all.

Source: magnets4you GmbH / Safety instructions Use of neodymium magnets / URL http://www.magnet-shop.net / Last update: 11/2013


© 11.2023_04

## 12.6 Baffle Plate / Restrictor Plate



### 12.6.1 Use

- On regulators (pilots)

### 12.6.2 Application / Function

If the outlet pressure of the regulator varies too much, this can be remedied by installing restrictor and baffle plates in the breather line or the impulse (measurement) line.

A set of the restrictor and baffle plates is located in the sealing cap (item 7) on the spring cap (item 4) of the regulator.

### 12.6.3 Mounting

1. Remove the throttle and baffle plates by unscrewing the sealing cap (item 7) from the regulator and then the locking screw (item 8) from the sealing cap (item 7).

2. Installation of the restrictor plate in the breather line

   First the restrictor plate (item 9) is installed in the breather line.
   The restrictor plate is installed behind the Ermeto screw fitting (item 5) in the bore of the diaphragm hood top (item 3).
   Screw the sealing cap (item 7) again onto the spring cap (item 4) and put the gas regulation section into operation again. If the installation of the restrictor plate (item 9) has given the desired result, the outlet pressure no longer varies, and the regulator reacts as desired, continue with item 4. If it has given the desired result, continue with item 3.

   The restriction must not make the regulator so sluggish that the SSV drops when starting or switching off the gas regulation section.

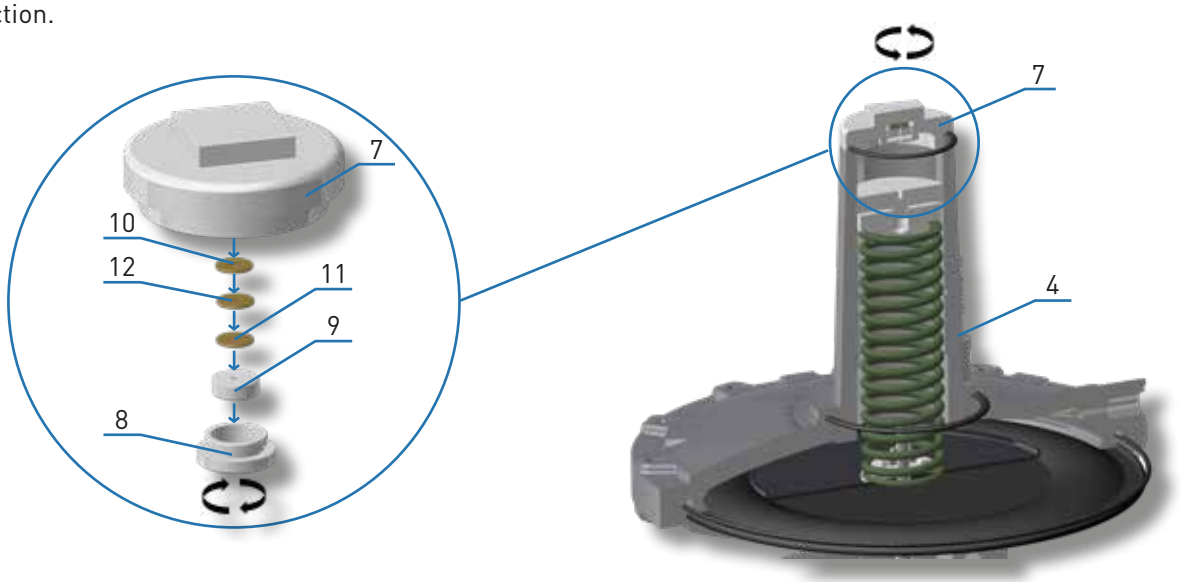


3. Installation of the baffle plates in the impulse line
   The regulator flow can be restricted by installing a baffle plate (items 10, 11 or 12) in the impulse line.
   To do so, the ball valve upstream of the gas pressure regulator must be closed, and the gas regulation section must be depressurized by discharging the gas to the atmosphere as prescribed (see operating manual). The baffle plate (item 10) is then installed in the impulse line between the Ermeto screw fitting (item 6) and the impulse line and screwed down again. The gas regulation section is then put into operation as specified (see operating manual).


© 11.2023_04

If the outlet pressure remains stable during operation and the regulator reacts as desired, continue with item 4.

If the outlet pressure still varies, the installation process of the baffle plate (item 11) can be repeated.
If this still doesn't give the desired result, the installation process can be repeated with the baffle plate (item 12).
If the outlet pressure remains stable during operation and the regulator reacts as desired, continue with item 4.

If this procedure is not successful, contact MEDENUS to find out other solution options.
The restriction must not make the regulator so sluggish that the SSV drops when starting or switching off the gas regulation section.

4. Put the baffle and restrictor plates that are not required back into sealing cap (item 7) and screw down the locking screw (item 8). Seal the spring cap (item 4) of the regulator as prescribed using the sealing cap (item 7). After completion of all of the work, a leakage test must be performed on the gas regulation section.

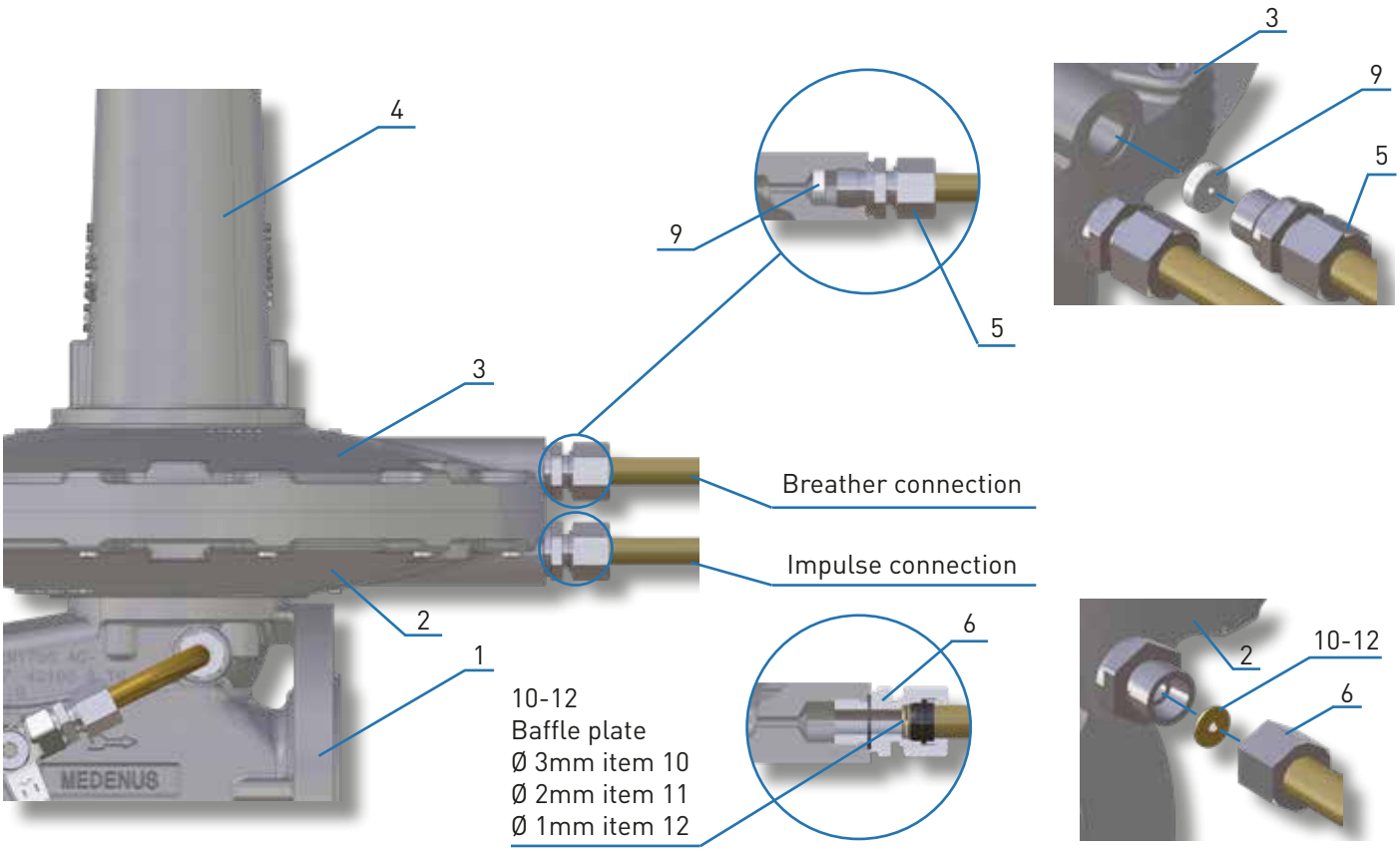


## Legend

1. Housing
2. Diaphragm cover bottom
3. Diaphragm cover top
4. Spring cap
5. Ermeto screw fitting breather connection
6. Ermeto screw fitting pulse connection
7. Sealing cap
8. Lock screw
9. Restrictor plate
10. Baffle plate Ø 3mm
11. Baffle plate Ø 2mm
12. Baffle plate Ø 1mm


© 11.2023_04

## 12.7 SSV manual and remote release

### 12.7.1 Use



- On SAV control devices

### 12.7.2 Application / Function

The direct-acting solenoid valve is used as electromagnetic remote release for closing the safety shut-off valve. Only for SSV control devices of functional class A.
Can not be used in conjunction with a breathing valve AV530 on the SSV.

Upon being energized or in case of power failure, the valve closes the impulse line, resulting in the pressure falling below the response pressure to be monitored. As a result, the SSV actuator shuts off the gas flow gas-tight.

After being released, the safety shut-off valve can only be opened by hand and engaged in the open position.

### 12.7.3 Technical Data

| | |
|---|---|
| • Housing material | stainless steel, polyamide (flange) |
| • Sealing material | FKM (EPDM upon request) |
| • Media | Neutral gases and liquids (e.g. compressed air, city gas, grid gas, water, hydraulic oil, petrol). Suitable for technical grade vacuum. |
| • Media temperature | -10° to +100 °C (PA coil) up to 120 °C epoxy |
| • Polyamid coil (FKM seal) | Coil |
| • Ambient temperature | max. +55 °C |
| • Viscosity | max. 21 $mm^2/s$ |
| • Line connection | G 1/8, G 1/4, flange (SFB) |
| • Operating voltage | 24 V DC, 24 V/50 Hz |
| • | (other voltages upon request) |
| • Voltage tolerance | ±10% |
| • Nominal operating mode / Single valve | Permanent operation 100% |
| • Electrical connection | DIN EN 175301-803 form A for device socket |
| • | Type 2508 (see ordering table accessories) |
| • | ATEX/IECEx version potted with 3 m cable |
| • Installation position | Any, preferably drive pointing upwards |
| • Degree of protection | IP65 with device socket, ATEX/IECEx terminal connection version |
| • | and cable connection version |
| • | NEMA 4x with device socket 2508 or 2509 |
| • | for VA versions (other versions upon request) |
| • Thermal insulation class coil | Polyamide class B (epoxy class H upon request) |
| • Coil material polyamide | (epoxy upon request) |
| • Nominal width | DN 1.5 - 2.5 |

**Note**

Further technical data and information on the 3/2-way valve, such as information on ATEX, are available for download on the manufacturer's homepage.


© 11.2023_04

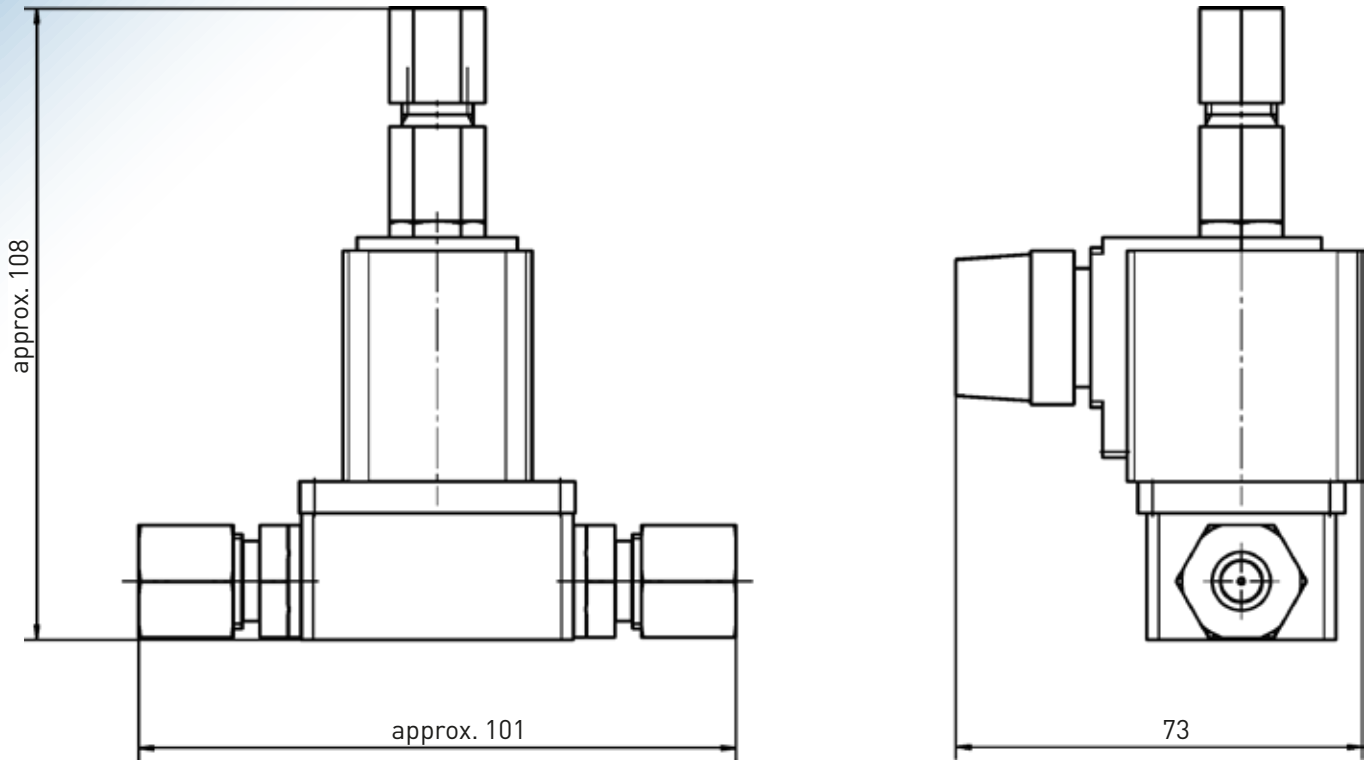


### 12.7.4 Application example

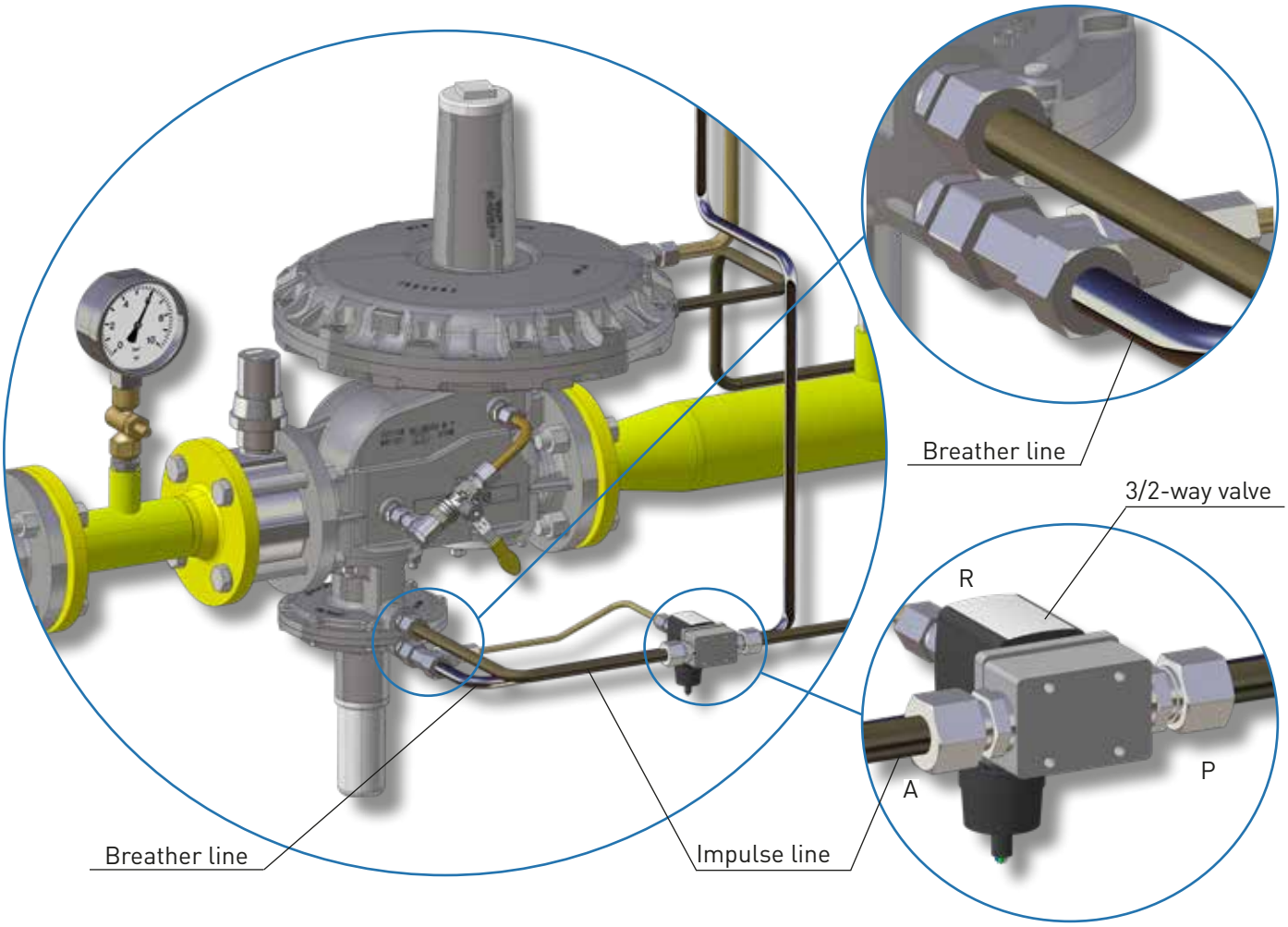



© 11.2023_04

## 12.8. SM Safety Diaphragm

### 12.8.1 Use



- Gas pressure regulators RS 250 / RS 251
- Gas pressure regulators RS 250 / RS 251
- Gas pressure regulators R 100 / R 100-U
- Gas pressure regulators R101

**(Option not available for hydrogen version $H_2$)**

### 12.8.2 Application / Function

In the model with safety diaphragm, the safety diaphragm is located above the main diaphragm. When the main diaphragm ruptures, the safety diaphragm makes contact with the top cover of the diaphragm assembly and prevents any inadmissible escape of gas into the surrounding atmosphere.

### 12.8.3 Application example

Gas pressure regulator RS250/DN080/385 with safety diaphragm

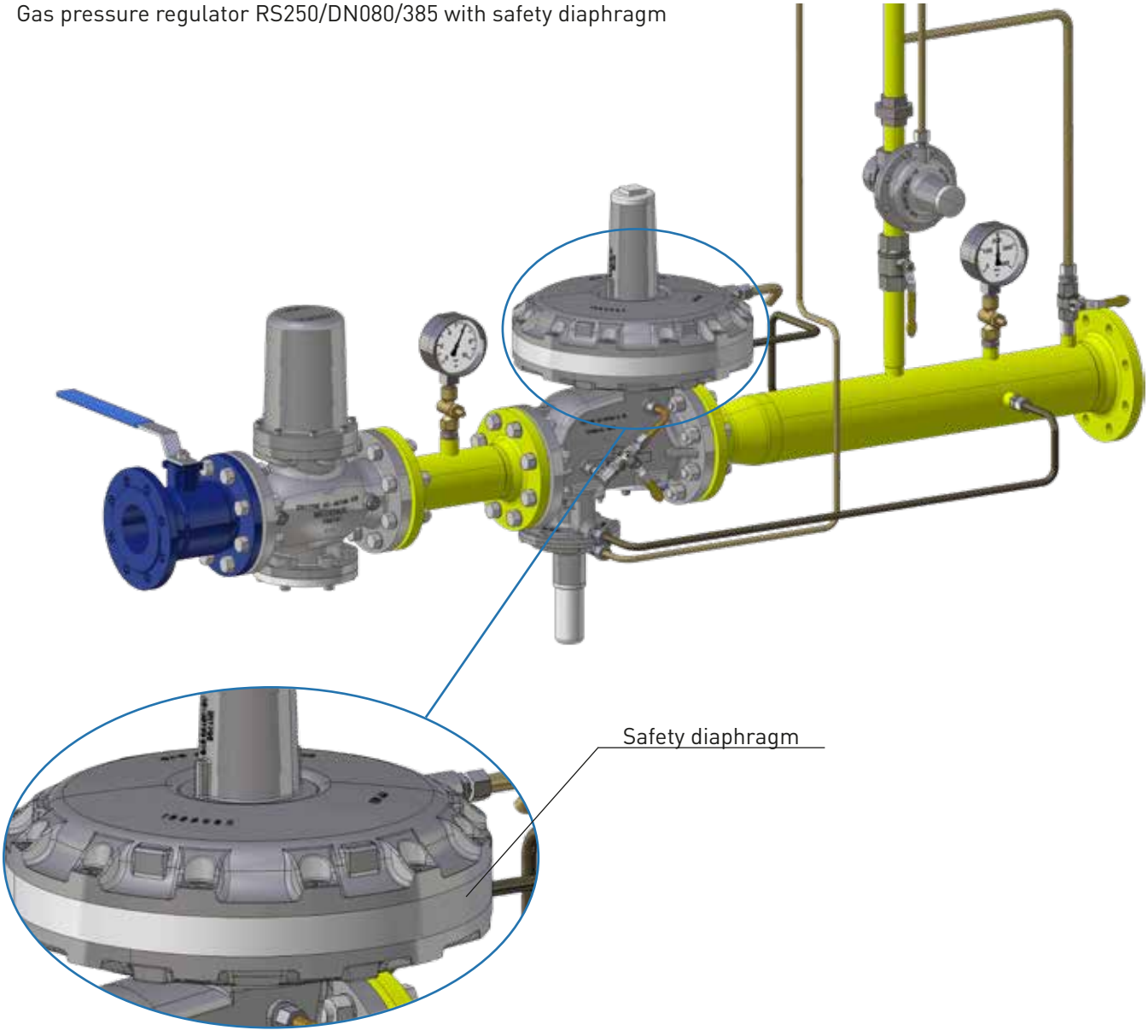




© 11.2023_04

# 13 Tools

## 13.1 Brace and bit with 4-jaw chuck



The 3.5 - 16 mm brace and bit with 4-jaw chuck and the accessories available for it are used for precise adjustment of the setpoint spring in your MEDENUS gas pressure regulator.

For further information for use and on the spring data of the setpoint springs, please refer to chapter 7.4 "Initial commissioning / Recommissioning" and chapter 7.5 "Diaphragm assembly setpoint spring table".

### 13.1.1 Accessories for brace and bit with 4-jaw chuck

Gedore screwdriver bit 1/2" slotted 18x2.5 mm



- Hexagon square drive to DIN 3120 - C 12.5, ISO 1174, with ball groove
- Hand-operated, with slip-proof cross knurling
- Chrome-plated
- With pressed-in pin made of GEDORE vanadium special steel, manganese-phosphatized
- Cutting blade to DIN ISO 2380-1 form B

Gedore extension 1/2" 76 mm



- Model to DIN 3123, ISO 3316
- For hand-operated socket wrench inserts with square drive to DIN 3120, ISO 1174, with ball detent
- GEDORE vanadium steel 31CrV3, chrome-plated

Gedore extension 1/2" 76 mm



- Model to DIN 3123, ISO 3316
- For hand-operated socket wrench inserts with square drive to DIN 3120, ISO 1174, with ball detent

- GEDORE vanadium steel 31CrV3, chrome-plated

## 13.2 SSV Tightening Tool

The tightening tool made of stainless steel is used for replacing the SSV diaphragm in your MEDENUS safety shut-off valve.



Old design

Old design
- Width across flats 22
- Stainless steel 42CrMo4



New design

New design
- Width across flats 32
- EN AW-2007 or similar



© 11.2023_04

# Declaration of Conformity

Manufacturer: Medenus Gas-Druckregeltechnik GmbH
Address: Im Langen Feld 3
D-57462 Olpe

declares under sole responsibility that the products:
**R 250 / RS 250 / RP 250 / RSP 250**
**R 251 / RS 251 / RP 251 / RSP 251**

Gas Pressure regulator (spring-loaded proportional regulator), optionally with safety shut-off valve (SSV) for upper and lower shut-off pressure, and / or with pilot support, have been subjected to an EC-type examination and conform to the basic requirements of the directives
GAR (EU) 2016/426 EC-Gas Appliances Regulation and 2014/68/EU A III B EC-Pressure Equipment Directive in the respective current version.

Marking (PIN) according to Pressure Equipment Directive and Gas Appliances Regulation

**CE-0085AQ0882 model R 250 / RS 250 / RP 250 / RSP 250**
**CE-0085AQ0883 model R 251 / RS 251 / RP 251 / RSP 251**

| | |
|---|---|
| Notified body (EU type examination: Module B) | DVGW CERT GmbH<br>Josef Wirmer Straße 1-3<br>D-53123 Bonn, Germany<br>Notified Body number: 0085 |

The basis of the EC type examination are the harmonized European standards and / or national standards, as well as the European directives and / or regulations:

| | |
|---|---|
| 2014/68/EU A III B EC Pressure Equipment Directive | (15.04.2014) |
| GAR (EU) 2016/426 A III B EC Gas Appliances Regulation | (09.03.2016) |
| DIN EN 334 | (01.11.2019) |
| DIN EN 14382 | (01.11.2019) |

| | |
|---|---|
| Monitoring of the EC quality assurance system (module D) | DVGW CERT GmbH<br>Notified Body number: 0085 |

Registration No. Pressure Equipment Directive **SD-0085BQ0510**
Registration No. Gas Appliances Regulation **SE-0085BQ0510**

Olpe,
07.08.2023

Alexander Christiani
Managing Director


© 11.2023_04

**MEDENUS** Gas-Druckregeltechnik GmbH
Phone +49 (0)2761 82788-0
Fax +49 (0)2761 82788-9
Im Langen Feld 3 / D-57462 Olpe
info@medenus.de
www.medenus.de

EN